JBG2



PLUG-IN & **REMOTE**
COLLECTION

COOL EQUIPMENT
WARM RELATIONS



REMOTE

Multidecks

Gerlach 2.0 RDGH-H2/H3/H4 8
Gerlach 2.0 RDGH-L2/L3/L4 10
Iberg 2.0 RDIG-H1/H2/H4 12
Iberg 2.0 RDIG-H1/H2 13
Iberg 2.0 RDIG-L1/L2/L3 14
Iberg 2.0 RDIG-L1/L2 15
Kaukaz RDKA-11 16

Semi Vertical Multidecks

Andy RDAD-N5 20
Andy RDAN-29 21
Andy RDAN-31 22
Andy RDAN-37 23

Islands

Everest WNEV-06 26
Everest WNEV-17 27
Everest WNEV-27 28
Idea WNIE-04 29
Idea WNIE-05 30

Cabinets

Glacier SNGL-H/L 34

Counters

Grazia LDGR-08 38
Grazia LDGR-09 39
Grazia LDGR-28 40
Grazia LDGR-29 41
Grazia LDGR-30 42
Lhotse LDLH-12 43
Lhotse LDLH-36 44
Lhotse LDLH-37 45
Lhotse LDLH-46 46
Lhotse LDLH-47 47

HOT CASES

Counters

Grazia LGGR-28 50
Lhotse LGLH-37 51

PLUG-IN

Multidecks

Kaukaz RDKA-11 56
Medium RDME-10 57
Medium RDME-16 58
Medium RDME-21 59
Medium RDME-22 60
Garmo RDGA-L4 61
Garmo RDGA-L5 62

Semi Vertical Multidecks

Atlanta RDAT-10 66
Atlanta RDAL-N5 67
Atlanta RDAT-20 68
Atlanta RDAT-30 69

Islands

Pamir WNPR-04 72
Pamir WDPR-04 73
Pamir WNPA-09 74
Pamir WNPA-10 75
Pamir WNPA-15 76
Imja WNIJ-05 77
Imja WNIJ-06 78
Imja WNIJ-07 79
Imja WNIJ-14 80
Dolomiti WMDO-03 81
Elbrus WNEL-17 82
Elbrus WNEL-27 83

Cabinets

Wetar SNWE-02 86
Wetar SNWE-04 87
Denali SNDE-04/05 88
Glacier SNGL-L 89

Promotion

Fiji LDFI-13 92
Fiji LDFI-14 93
Fiji LDFI-22 94
Fiji LDFI-25 95
Fiji LDFI-28 96
Fiji LDFI-29 97
Fiji LDFI-30/31/32 98

Pastery Line

Elegant RDEL-05 102
Elegant RDEL-06 103
Elegant RDEL-21 104
Elegant RDEL-22 105
Etna RDET-21 106

Counters

Grazia LDGR-08 110
Grazia LDGR-09 111
Grazia LDGR-28 112
Grazia LDGR-29 113
Lingtren LDLI-37 114

D – cooling, fan-assisted unit
N – freezing, fan-assisted unit
M – freezing, static unit

two letters of the product name

Gerlach 2.0 RDGH - H2 - [module]

name of the product range

L – counter
R – multideck
W – island
S – cabinet
M – mix cabinet

identifies the model

module length, head (crown section) or corner

GGG	glazing type	glass type	opening type
BCA	low glass or front glass riser	single, bent	fixed
BSA	low glass or front glass riser	single, straight	fixed
BDA	front glass riser	double, straight	fixed
CCP	cover	single, curved	sliding (slide-up/push)
CCS	cover	single, curved	sliding (sideways)
CSS	cover	single, straight	sliding (sideways)
DBS	door	double, bent	sliding (sideways)
DDS	door	double, straight	sliding (sideways)
DVO	door	double, straight (High Vision)	hinged
DTO	door	triple, straight	hinged

GGG	glazing type	glass type	opening type
GCL	glass	single, bent	lift up
GSD	glass	single, straight	divided
GSL	glass	single, straight	lift up
GST	glass	single, straight	tilt
GBT	glass	double, bent	tilt
GDT	glass	double, straight	tilt
XXX	no glazing		

...**-G**... – Head (crown section)
...**-NW**... – Inside corner
...**-NZ**... – Outside corner



About us

Many years of experience, state-of-the-art production plant and great location are the few of many factors that contribute to JBG-2's success. Hundreds of satisfied customers around the world especially appreciate our creative approach, flexibility and commitment to the successful completion of every project.

Since the very beginning of our activities in 1989 ecology has been our main concern, both at the stage of the production itself and at the subsequent effect of our products on the environment.

For the sake of quality, we carry out tests in our certified laboratories that meet the requirements of ISO 23953-2:2015. Quality management is based on the ISO 9001:2015 standard.

We are not only manufacturer of refrigeration equipment. Based on many years of experience we created new brand named JBGPV. It is a production of photovoltaic modules, which fits perfectly into the company's portfolio and it makes it even more effective and ecological.

Our team is always ready to go the extra mile to make the cooperation with us successful, satisfying and sustainable.

For over 20 years of our activities, JBG-2 has been awarded with prestigious honor on noumerous occasions, for dynamic growth in the refrigeration equipment market.

The NO Defrost system has been valued by the RAC Cooling Awards. We managed to achieve the final stage in 2016 and 2018 in this prestigious competition. Furthermore the energy-efficient solutions have been qualified to the TOP TEN program. In addition, the effort put into improving our devices meant that they got to the prestigious Enegry Technology List.

Awards

HIGHLY COMMENDED

rac COOLING INDUSTRY AWARDS 18 CLIMATE CENTER

This is the jury's distinction in the RAC Cooling Awards final for a device awarded with a high recommendation as a product containing many „best-in-class" solutions.

topten.eu

Our equipment Garmo RDGA-L4-2500, Pamir WDPA-01-1530 and WNPA-01-1530 eco version have been classified to governmental project in Switzerland and Austria. Clients from those countries who will buy devices from Top Ten List can apply for the partial refund of purchase this government program.

Qualified for Energy Technology List

On behalf of the UK government Carbon Trust is managed the list of Energy-saving devices (The Energy Technology List). It publishes the devices which have been qualified to promotion of energy efficiency programme (Enhanced Capital Allowance scheme). This programme allowes for the tax breaks in connection with using so-called green technology.






REMOTE





Multidecks

REMOTE

Our desire for continuous improvement and innovation has led us to develop systems and solutions that reduce environmental impact. That is why we have developed a system that eliminates defrost cycle and lowers the energy use.

Designed for natural (hydrocarbons) refrigerants

R744

GLOBAL WARMING POTENTIAL (AR4)

1

Gerlach 2.0 RDGH-H2/H3/H4
DVO



Gerlach 2.0 RDGH-H2 2500 DVO

STANDARD FEATURES

- working temperature: from 0°C to 2°C
- refrigerant: R744
- natural defrosting
- 2 x NTC temperature probe
- siphoned condensate drains
- exposition: zinc-plated steel, powder coated in white (RAL 9003)
- 4 rows of suspended shelves, on shelves and on air inlet price holders 39 mm
- lighting: top, LEDit, color NW-4
- color of the base – black (RAL 9005)
- grey PVC bumper on the front of the unit

OPTIONS

- electronic expansion valve
- sidewalls

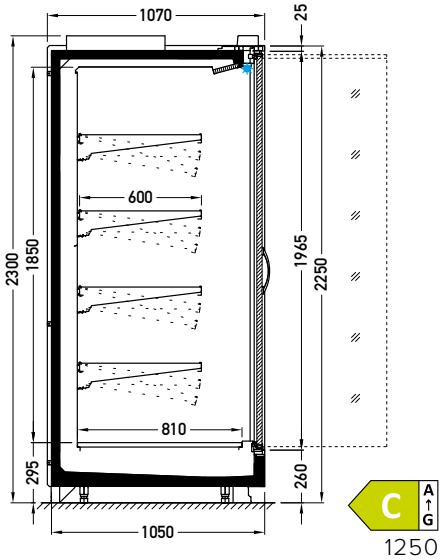

RDGH-H2 DVO

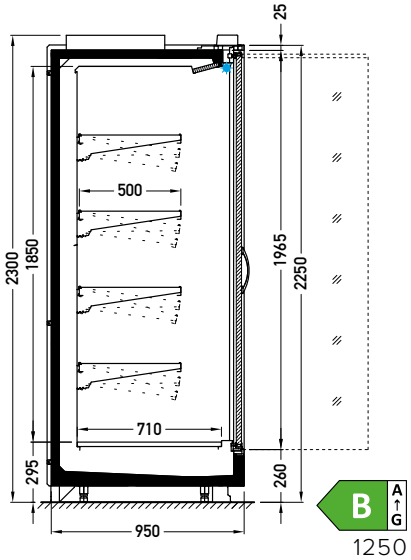

RDGH-H3 DVO

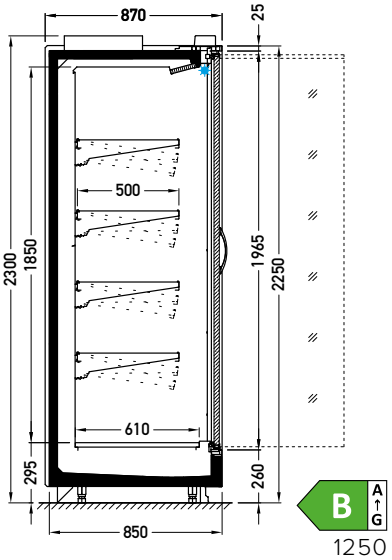

RDGH-H4 DVO

AVAILABLE MODULES | 1250 1875 2150 2500 3750

Gerlach 2.0 RDGH-H2/H3/H4
XXX



Gerlach 2.0 RDGH-H2 2500 XXX

STANDARD FEATURES

- working temperature: from 0°C to 2°C
- refrigerant: R744
- natural defrosting
- 2 x NTC temperature probe
- siphoned condensate drains
- exposition: zinc-plated steel, powder coated in white (RAL 9003)
- 4 rows of suspended shelves, on shelves and on air inlet price holders 39 mm
- lighting: top, LEDit, color NW-4
- color of the base – black (RAL 9005)
- grey PVC bumper on the front of the unit
- mechanical night blind

OPTIONS

- electronic expansion valve
- sidewalls

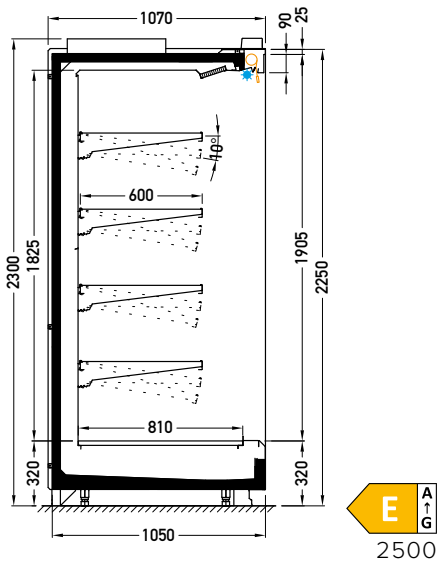

RDGH-H2 XXX

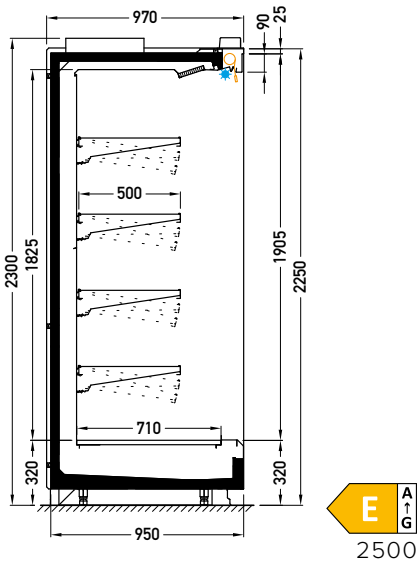

RDGH-H3 XXX

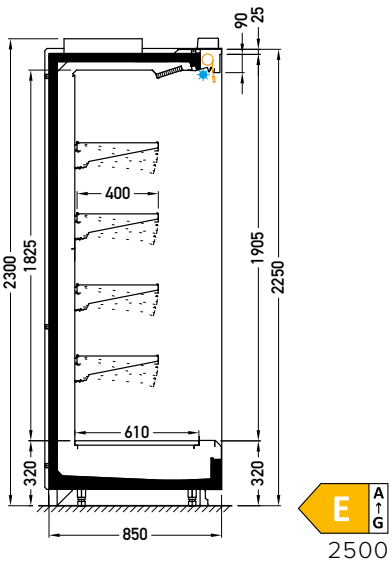

RDGH-H4 XXX

AVAILABLE MODULES | 1250 1875 2150 2500 3750

Gerlach 2.0 RDGH-L2/L3/L4
DVO



Gerlach 2.0 RDGH-L2 2500 DVO

STANDARD FEATURES

- working temperature: from 0°C to 2°C
- refrigerant: R744
- natural defrosting
- 2 x NTC temperature probe
- siphoned condensate drains
- exposition: zinc-plated steel, powder coated in white (RAL 9003)
- 4 rows of suspended shelves, on shelves and on air inlet price holders 39 mm
- lighting: top, LEDit, color NW-4
- color of the base – black (RAL 9005)
- grey PVC bumper on the front of the unit

OPTIONS

- electronic expansion valve
- sidewalls

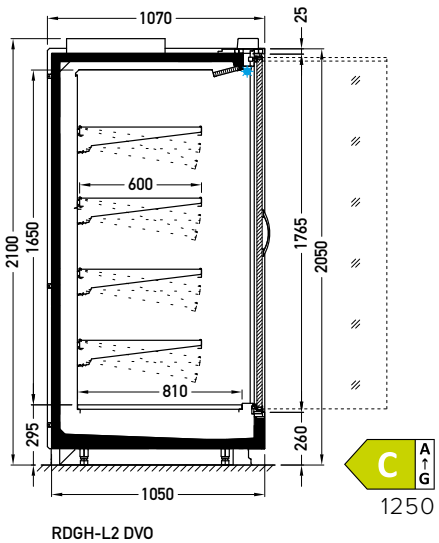

RDGH-L2 DVO

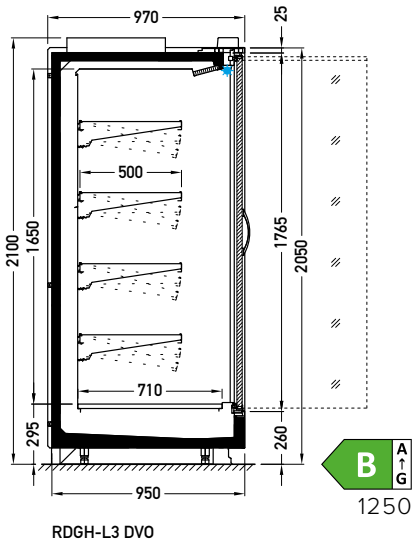

RDGH-L3 DVO

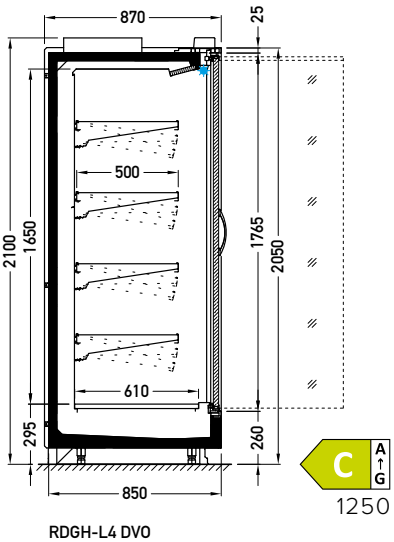

RDGH-L4 DVO

AVAILABLE MODULES | 1250 1875 2150 2500 3750

Gerlach 2.0 RDGH-L2/L3/L4
XXX



STANDARD FEATURES

- working temperature: from 0°C to 2°C
- refrigerant: R744
- natural defrosting
- 2 x NTC temperature probe
- siphoned condensate drains
- exposition: zinc-plated steel, powder coated in white (RAL 9003)
- 4 rows of suspended shelves, on shelves and on air inlet price holders 39 mm
- lighting: top, LEDit, color NW-4
- color of the base – black (RAL 9005)
- grey PVC bumper on the front of the unit
- mechanical night blind

OPTIONS

- electronic expansion valve
- sidewalls

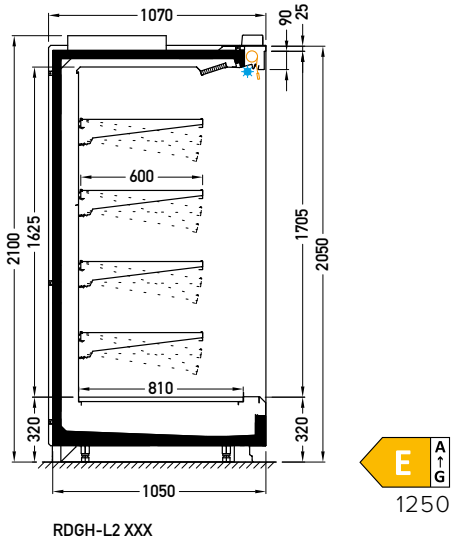

RDGH-L2 XXX

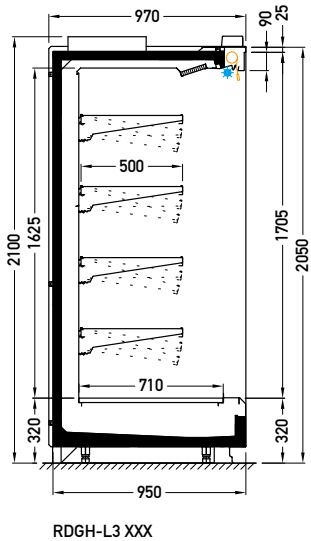

RDGH-L3 XXX

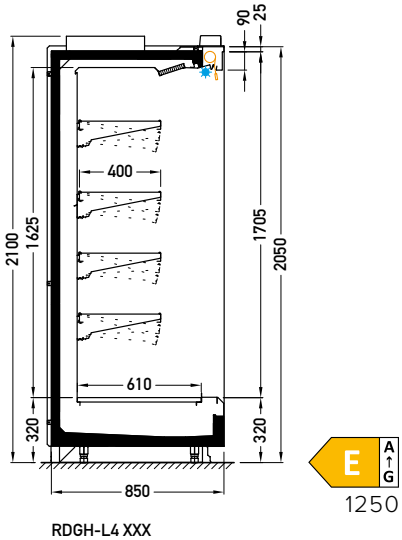

RDGH-L4 XXX

AVAILABLE MODULES | 1250 1875 2150 2500 3750

Iberg 2.0 RDIG-H1/H2/H4
DVO



Iberg 2.0 RDIG-H2 2500 DVO

STANDARD FEATURES

- working temperature: from 0°C to 2°C
- refrigerant: R744
- natural defrosting
- 2 x NTC temperature probe
- siphoned condensate drains
- exposition: zinc-plated steel, powder coated in white (RAL 9003)
- 4 rows of suspended shelves, on shelves and on air inlet price holders 39 mm
- lighting: top, LEDit, NW-4
- color of the base – black (RAL 9005)
- grey PVC bumper on the front of the unit

OPTIONS

- electronic expansion valve
- sidewalls

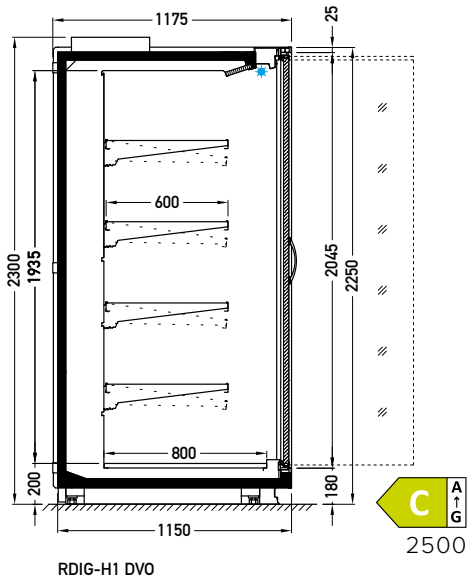

RDIG-H1 DVO

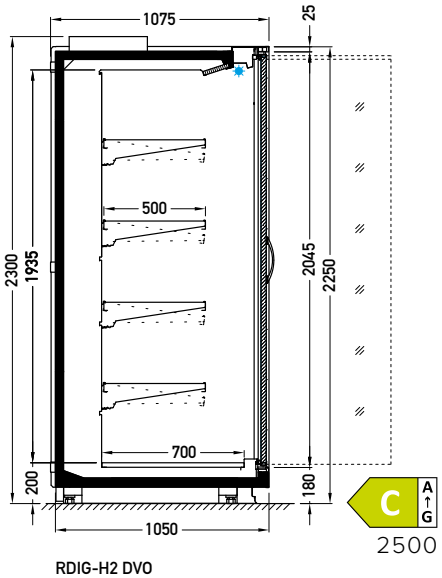

RDIG-H2 DVO

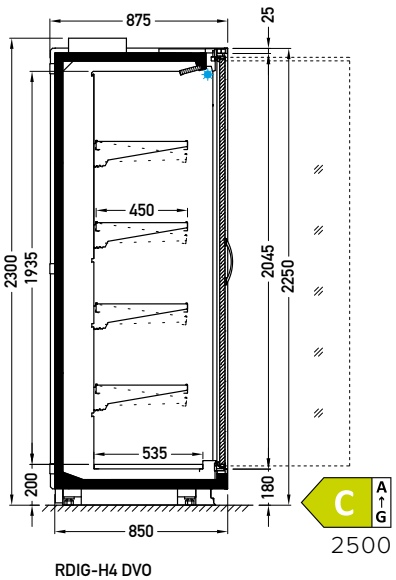

RDIG-H4 DVO

AVAILABLE MODULES | 1250 1875 2150 2500 3750

Iberg 2.0 RDIG-H1/H2
BDA



Iberg 2.0 RDIG-H2 2500 BDA

STANDARD FEATURES

- working temperature: from 0°C to 2°C
- refrigerant: R744
- natural defrosting
- 2 x NTC temperature probe
- siphoned condensate drains
- exposition: zinc-plated steel, powder coated in white (RAL 9003)
- 4 rows of suspended shelves, on shelves and on air inlet price holders 39 mm
- lighting: top, LEDit, NW-4
- color of the base – black (RAL 9005)
- grey PVC bumper on the front of the unit
- mechanical night blind

OPTIONS

- electronic expansion valve
- sidewalls

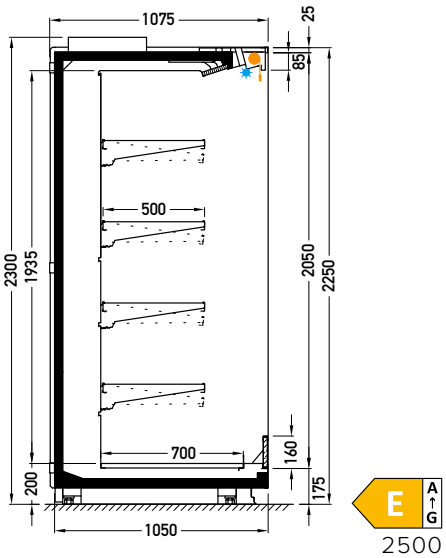

2500

RDIG-H2 BDA

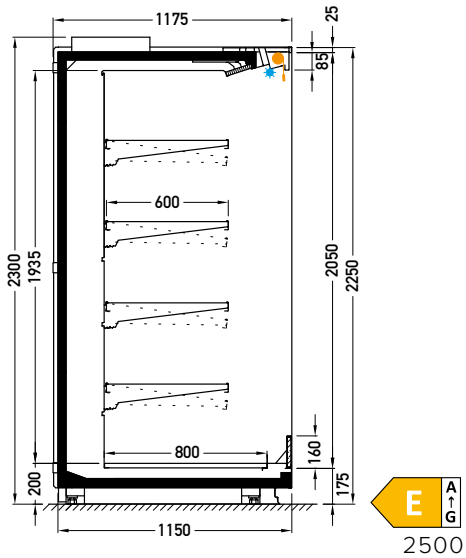

2500

RDIG-H1 BDA

AVAILABLE MODULES

H1	1250 1875 2150 2500 3750
H2	2500 3750

Iberg 2.0 RDIG-L1/L2/L3
DVO



Iberg 2.0 RDIG-L1 2500 DVO

STANDARD FEATURES

- working temperature: from 0°C to 2°C
- refrigerant: R744
- natural defrosting
- 2 x NTC temperature probe
- siphoned condensate drains
- exposition: zinc-plated steel, powder coated in white (RAL 9003)
- 4 rows of suspended shelves, on shelves and on air inlet price holders 39 mm
- lighting: top, LEDit, NW-4
- color of the base – black (RAL 9005)
- grey PVC bumper on the front of the unit

OPTIONS

- electronic expansion valve
- sidewalls

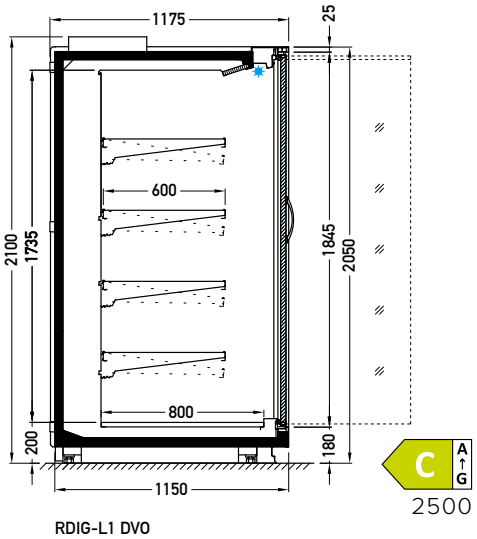

RDIG-L1 DVO

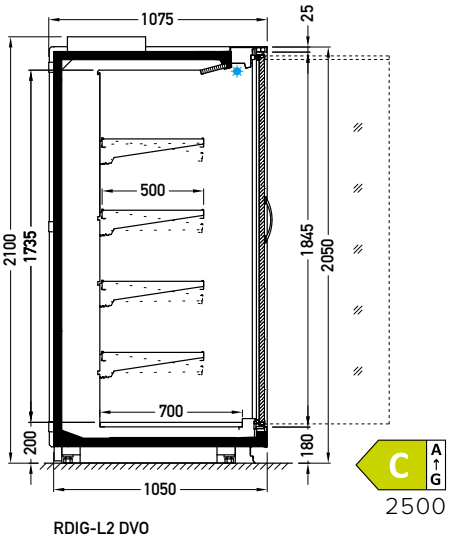

RDIG-L2 DVO

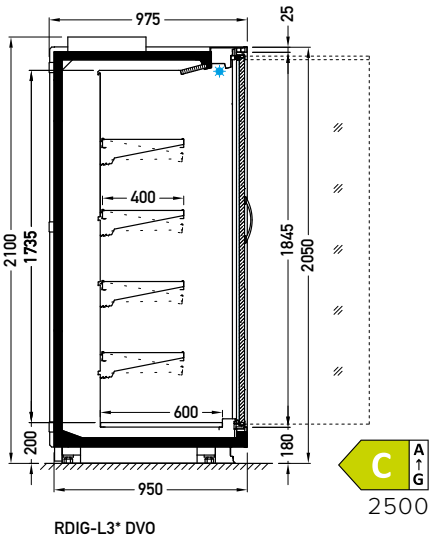

RDIG-L3* DVO

AVAILABLE MODULES | 2500 3750

Iberg 2.0 RDIG-L1/L2
BDA



Iberg 2.0 RDIG-L1 2500 BDA

STANDARD FEATURES

- working temperature: from 0°C to 2°C
- refrigerant: R744
- natural defrosting
- 2 x NTC temperature probe
- siphoned condensate drains
- exposition: zinc-plated steel, powder coated in white (RAL 9003)
- 4 rows of suspended shelves, on shelves and on air inlet price holders 39 mm
- lighting: top, LEDit, NW-4
- color of the base – black (RAL 9005)
- grey PVC bumper on the front of the unit
- mechanical night blind

OPTIONS

- electronic expansion valve
- sidewalls

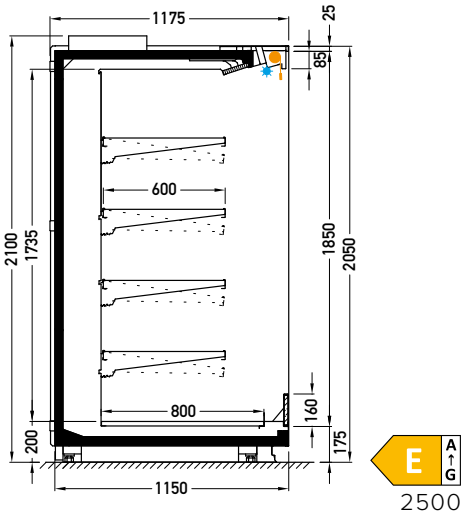

2500

RDIG-L1 BDA

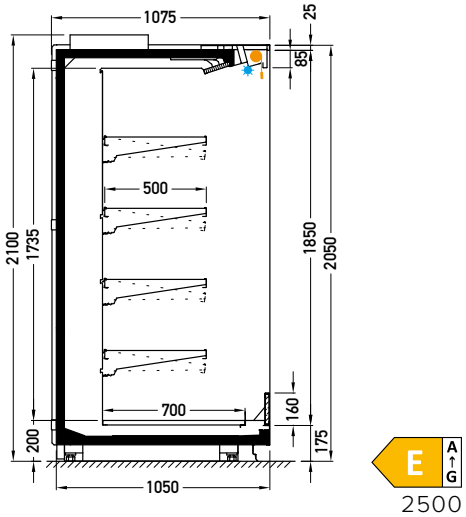

2500

RDIG-L2 BDA

AVAILABLE MODULES | 2500 3750

Kaukaz RDKA-11

DVO | DDS | XXX



Kaukaz RDKA-11 2500 DVO

STANDARD FEATURES

- working temperature: from 0°C to 2°C
- refrigerant: R744
- natural defrosting
- 2 x NTC temperature probe
- siphoned condensate drains
- exposition: zinc-plated steel, powder coated in white (RAL 9003)
- 4 rows of suspended shelves, on shelves and on air inlet price holders 39 mm
- lighting: top, LEDit, NW-4
- color of the base – black (RAL 9005)
- grey PVC bumper on the front of the unit
- mechanical night blind for version XXX

OPTIONS

- electronic expansion valve
- sidewalls

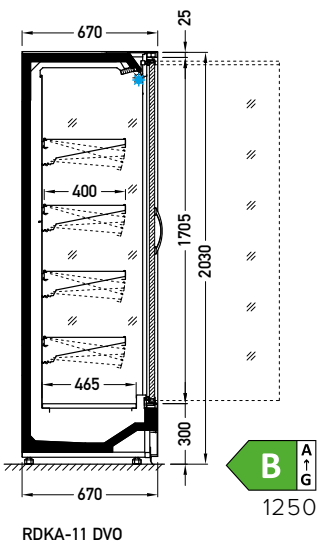

RDKA-11 DVO

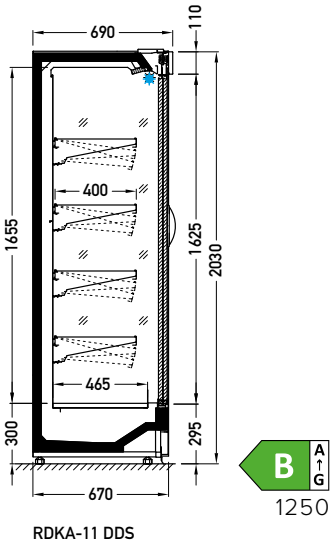

RDKA-11 DDS

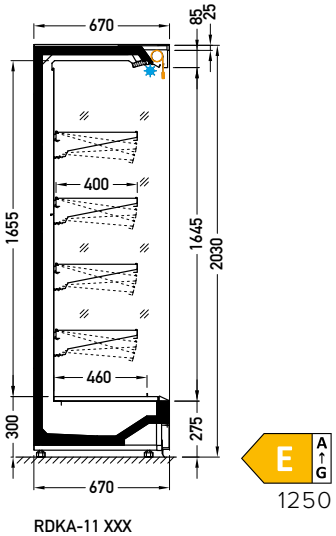

RDKA-11 XXX

AVAILABLE MODULES

DVO	**DDS**	1250	1875	2150	2500	3750		
XXX		0900	1000	1250	1875	2150	2500	3750





Semi Vertical
Multidecks
REMOTE

This range of lower height multidecks has been designed to combine compact size and large display area. This solution provides a variety of options for store layout.

Designed for natural (hydrocarbons) refrigerants

R744

GLOBAL WARMING POTENTIAL (AR4)

1

Andy RDAD-N5

BSA | DDS



Andy RDAD-N5 **2500 BSA**

STANDARD FEATURES

- working temperature from 0°C to 2°C;
- refrigerant: R744
- natural defrosting
- 2 x NTC temperature probe
- siphoned condensate drains
- exposition: zinc-plated steel, powder coated in white (RAL 9003)
- 3 rows of suspended shelves, on shelves and on air inlet price holders 39 mm
- lighting: top, LEDit, NW-4
- color of the base – black (RAL 9005)
- grey PVC bumper on the front of the unit
- mechanical night blind for version BSA

OPTIONS

- electronic expansion valve
- sidewalls

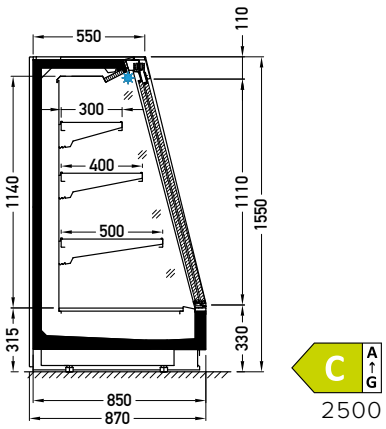

RDAD-N5* DDS

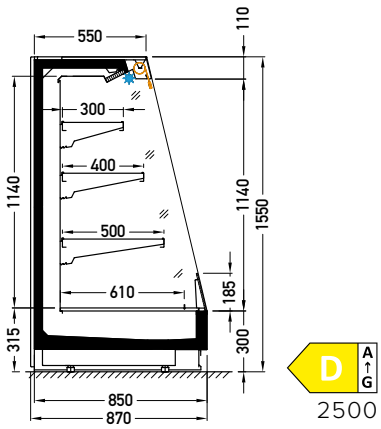

RDAD-N5* BSA

AVAILABLE MODULES | 1250 1875 2150 2500 3750

Andy RDAN-29

BSA | DDS



Andy RDAN 29 **2500 BSA**

STANDARD FEATURES

- working temperature from 0°C to 2°C
- refrigerant: R744
- natural defrosting
- 2 x NTC temperature probe
- siphoned condensate drains
- exposition: zinc-plated steel, powder coated in white (RAL 9003)
- 3 rows of suspended shelves, on shelves and on air inlet price holders 39 mm
- lighting: top, LEDit, NW-4
- color of the base – black (RAL 9005)

OPTIONS

- electronic expansion valve
- sidewalls

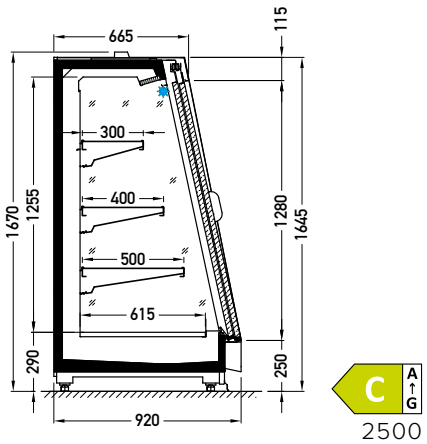

RDAN-29 DDS

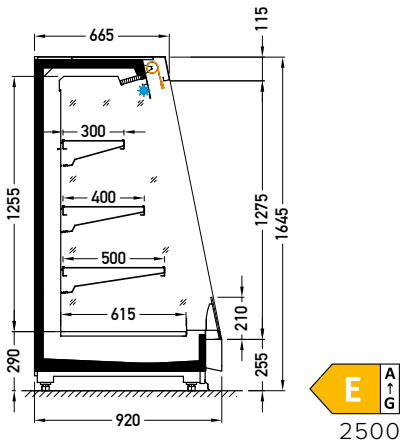

RDAN-29 BSA

AVAILABLE MODULES | 1250 1875 2500 3750

Andy RDAN-31
BSA



Andy RDAN-31 1250 BSA

STANDARD FEATURES

- working temperature, straight module: from 0°C to 2°C;
- refrigerant: R744
- natural defrosting
- 2 x NTC temperature probe
- siphoned condensate drains
- exposition: zinc-plated steel, powder coated in white (RAL 9003)
- 3 rows of suspended shelves, on shelves and on air inlet price holders 39 mm
- lighting: top, LEDit, NW-4
- color of the base – black (RAL 9005)
- mechanical night blind

OPTIONS

- electronic expansion valve
- sidewalls

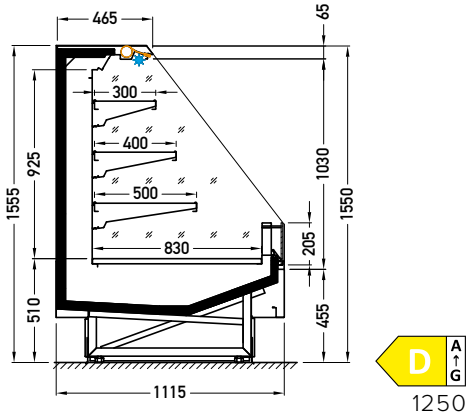

RDAN-31 BSA

AVAILABLE MODULES | 1250 1875 2500 3750

Andy RDAN-37

BSA | CSS



Andy RDAN-37 **2500 BSA**

STANDARD FEATURES

- working temperature, straight module: from 0°C to 2°C
- refrigerant: R744
- natural defrosting
- 2 x NTC temperature probe
- siphoned condensate drains
- exposition: zinc-plated steel, powder coated in white (RAL 9003)
- 2 rows of suspended shelves, on shelves and on air inlet price holders 39 mm
- lighting: top, LEDit, NW-4
- color of the base – black (RAL 9005)
- mechanical night blind

OPTIONS

- electronic expansion valve
- sidewalls

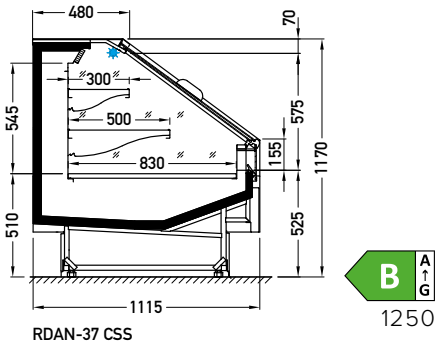

1250

RDAN-37 CSS

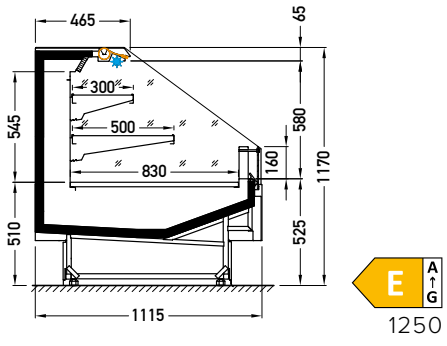

1250

RDAN-37 BSA

AVAILABLE MODULES | 1250 1875 2500 3750



Islands

REMOTE

These are best adapted for spaces, where you do not want to obscure the view. We constantly improve the design of our equipment and we managed to create better side visibility, easier combining into lines, better service access for some parts and better design capabilities with painted vertical corner profiles.

Designed for natural (hydrocarbons) refrigerants

R744

GLOBAL WARMING POTENTIAL (AR4)

1

Everest WNEV-06
CCP | XXX



Everest WNEV-06 **2500 CCP**

STANDARD FEATURES

- double island (1 evaporator per module)
- working temperature: from -25°C to -21°C
- refrigerant: R744
- electrical defrosting
- 2 x NTC temperature probe
- siphoned condensate drains
- thermopane glass
- exposition: zinc-plated steel, powder coated in white (RAL 9003)
- color of the base – black (RAL 9005)
- WNEV-06-1605G sidewalls integrated

OPTIONS

- electronic expansion valve
- bumper
- sidewalls
- LEDit lighting

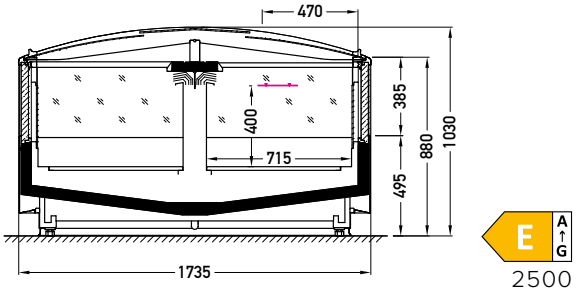

WNEV/WDEV-06 CCP

E A↑G 2500

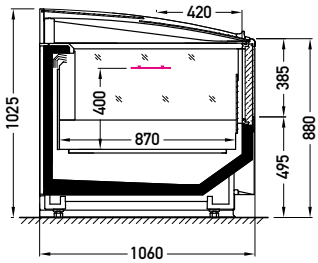

WNEV/WDEV-06-1605G CCP

E A↑G 1605

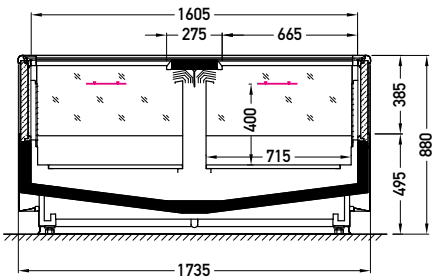

WNEV/WDEV-06 XXX

G A↑G 2500

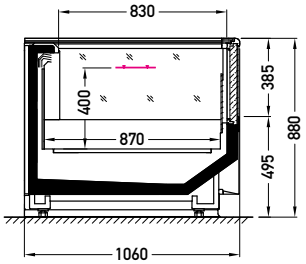

WNEV/WDEV-06-1605G XXX

F A↑G 1605

AVAILABLE MODULES | 1875 2500 3750 1605G

Everest WNEV-17
CCP



STANDARD FEATURES

- double island (1 evaporator per module)
- working temperature: from -25°C to -21°C
- refrigerant: R744
- electrical defrosting
- 2 x NTC temperature probe
- siphoned condensate drains
- thermopane glass
- exposition: zinc-plated steel, powder coated in white (RAL 9003)
- color of the base – black (RAL 9005)
- WNEV-17-1895G sidewalls integrated

OPTIONS

- electronic expansion valve
- bumper
- sidewalls
- LEDit lighting

Everest WNEV-17 **2500 CCP**

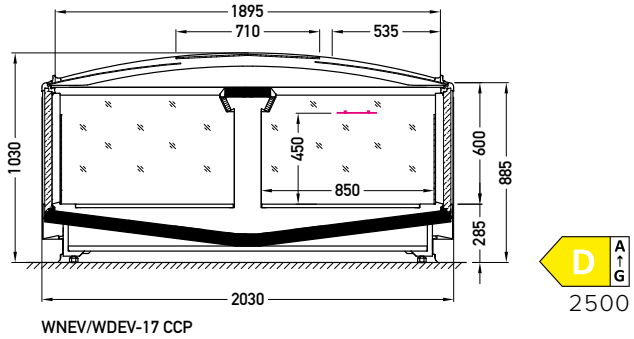

WNEV/WDEV-17 CCP

2500

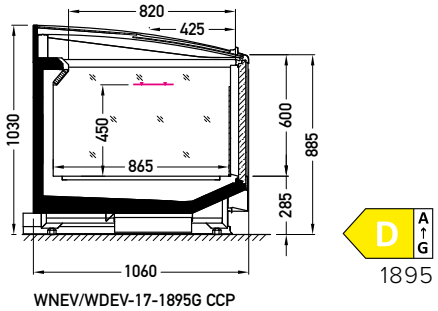

WNEV/WDEV-17-1895G CCP

1895

AVAILABLE MODULES | 1875 2500 3750 1895G

Everest WNEV-27

CCP | XXX

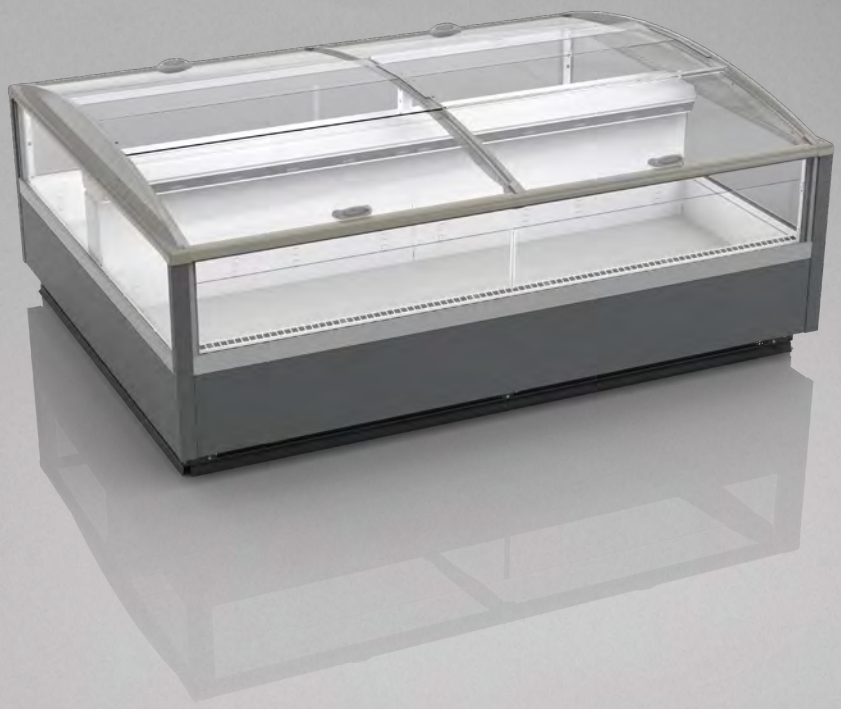

STANDARD FEATURES

- double island (1 evaporator per module)
- working temperature: from -25°C to -21°C
- refrigerant: R744
- electrical defrosting
- 2 x NTC temperature probe
- siphoned condensate drains
- thermopane glass
- exposition: zinc-plated steel, powder coated in white (RAL 9003)
- color of the base – black (RAL 9005)
- WNEV-27-1895G sidewalls integrated

OPTIONS

- electronic expansion valve
- bumper
- sidewalls
- LEDit lighting

Everest WNEV-27 **2500 CCP**

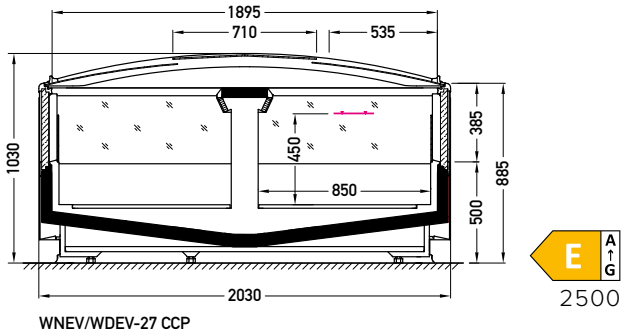

WNEV/WDEV-27 CCP

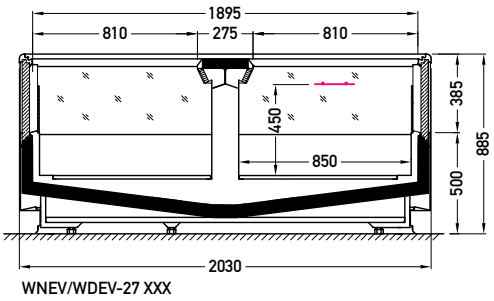

WNEV/WDEV-27 XXX

2500



2500

AVAILABLE MODULES

1875 2500 3750
1895G

Idea WNIE-04

CCP | CSS | XXX



Idea WNID-04 **2500 CSS**

STANDARD FEATURES

- working temperature: from -25°C to -21°C
- refrigerant: R744
- electrical defrosting
- 2 x NTC temperature probe
- siphoned condensate drains
- thermopane glass
- exposition: zinc-plated steel, powder coated in white (RAL 9003)
- color of the base – black (RAL 9005)
- WNID-04-1340G sidewalls integrated

OPTIONS

- electronic expansion valve
- bumper
- sidewalls
- LEDit lighting

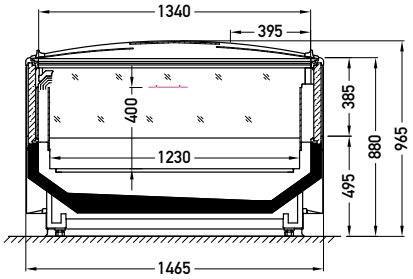

D A↑G 2500

WNIE/WDIE-04 CCP

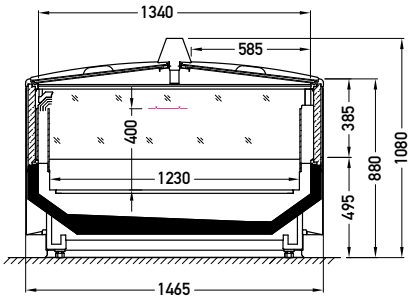

E A↑G 2500

WNIE/WDIE-04 CSS

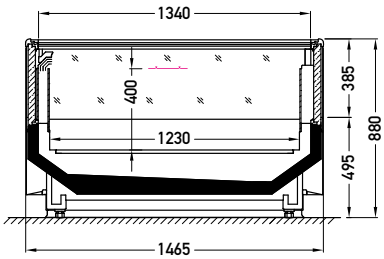

F A↑G 2500

WNIE/WDIE-04 XXX

AVAILABLE MODULES | 1875 2500 3750 1340G

Idea WNIE-05

CCS | XXX



Idea WNIE-05 **2500 CCS**

STANDARD FEATURES

- working temperature: from -25°C to -21°C
- refrigerant: R744
- electrical defrosting
- 2 x NTC temperature probe
- siphoned condensate drains
- thermopane glass
- exposition: zinc-plated steel, powder coated in white (RAL 9003)
- color of the base – black (RAL 9005)

OPTIONS

- electronic expansion valve
- bumper
- sidewalls
- LEDit lighting

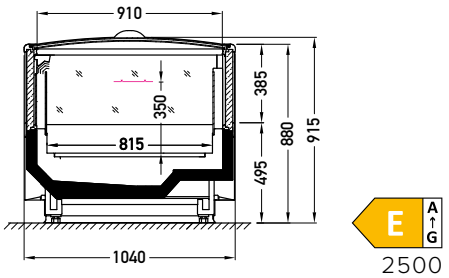

E A↑G

2500

WNIE/WDIE-05 CCS

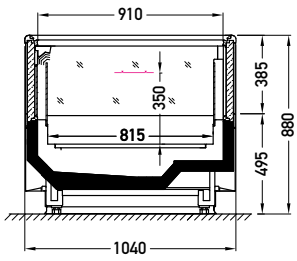

G A↑G

2500

WNIE/WDIE-05 XXX

AVAILABLE MODULES | 1875 2500 3750





Cabinets

REMOTE

It is typically people with busy lifestyles who are shopping for frozen products. Good arrangement of a store can save a lot of time while shopping. That is why design of our cabinets is about good visibility and ergonomics. Easy to choose – easy to reach. But when there is no perfect match for interior requirements, then the only solution is to mix. Our line of mix cabinets is a customized solution, so you do not have to compromise anymore – you just have a broad range of equipment to choose from.

Designed for natural (hydrocarbons) refrigerants

R744

GLOBAL WARMING POTENTIAL (AR4)

1

Glacier SNGL-H/L
DTO



Glacier SNGL-L3 2342 DTO

STANDARD FEATURES

- working temperature: from -25°C to -21°C
- refrigerant: R744
- electrical defrosting
- 2 x NTC temperature probe
- siphoned condensate drains
- 5 rows of suspended wire shelves for SNGL H and 4 rows for SNGL L, on shelves and on air inlet price holders 39 mm
- exposition: zinc-plated steel, powder coated in white (RAL 9003)
- lighting: vertical in doors frame, LEDit CW-2
- framed doors without heaters
- perspex divider between doors
- color of the base – black (RAL 9005)

OPTIONS

- electronic expansion valve
- bumper
- sidewalls

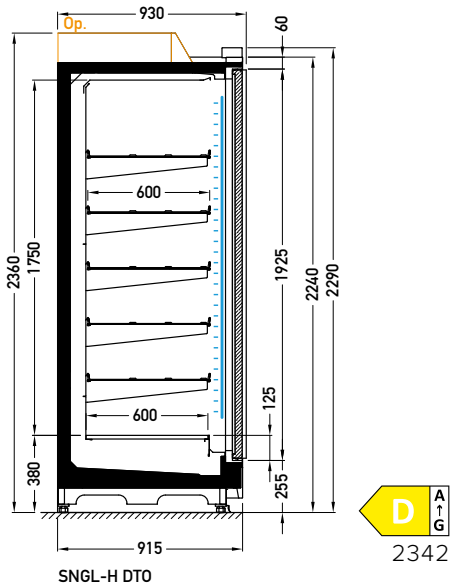

SNGL-H DTO

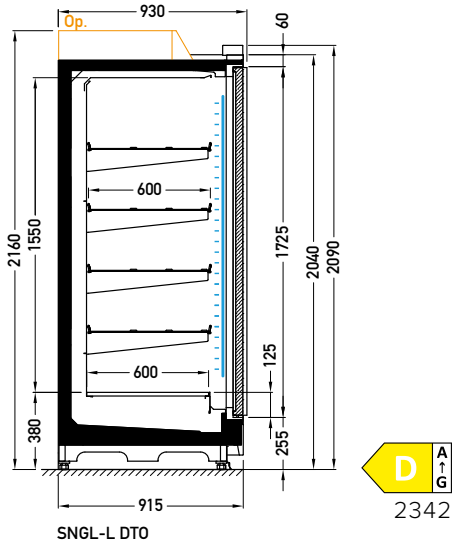

SNGL-L DTO

AVAILABLE MODULES

H2-1564 **H3**-2342 **H4**-3123 **H5**-3898
L2-1564 **L3**-2342 **L4**-3123 **L5**-3898



Counters
REMOTE

We focus not only on the display of the product, but also ergonomic and multifunctional use. We have created better conditions for product storage, easier cleaning and flexibility in changing the product from with service to self-service.

Designed for natural (hydrocarbons) refrigerants

R744

GLOBAL WARMING POTENTIAL (AR4)

1

Grazia LDGR-08
GCL



Grazia LDGR-08 **2500 GCL**

STANDARD FEATURES

- working temperature – straight module and corners from 0°C to 2°C
- refrigerant: R744
- electrical defrosting
- 2 x NTC temperature probe
- siphoned condensate drains
- back doors – quantity according to the module
- exposition: zinc-plated steel, powder coated in white (RAL 9003)
- storage: steel coated in grey
- worktop: linen stainless steel
- color of the base black (RAL 9005)
- perspex covers – 1250, 1875, 2500, 3750

OPTIONS

- electronic expansion valve
- LEDit lighting
- PVC floor profiles
- bumper
- sidewalls

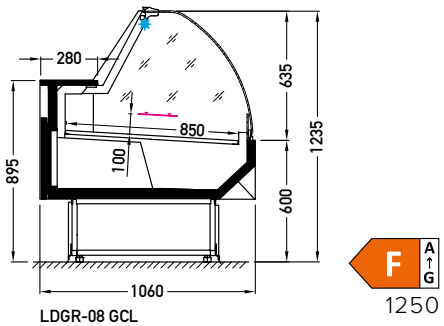

LDGR-08 GCL

F A↑G

1250

AVAILABLE MODULES

1250 1875 2500 3750
NW45 NZ45

Grazia LDGR-09
GCL



Grazia LDGR-09 **2500 GCL**

STANDARD FEATURES

- working temperature – straight module and corners from 0°C to 2°C
- refrigerant: R744
- electrical defrosting
- 2 x NTC temperature probe
- siphoned condensate drains
- exposition: zinc-plated steel, powder coated in white (RAL 9003)
- worktop: linen stainless steel
- color of the base black (RAL 9005)
- perspex covers – 1250, 1875, 2500, 3750

OPTIONS

- electronic expansion valve
- LEDit lighting
- PVC floor profiles
- bumper
- sidewalls

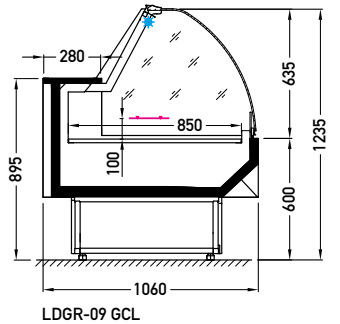

LDGR-09 GCL



1250

AVAILABLE MODULES

1250 1875 2500 3750
NW45 NZ45

Grazia LDGR-28
GSL



Grazia LDGR-28 **2500 GSL**

STANDARD FEATURES

- working temperature – straight module and corners from 0°C to 2°C
- refrigerant: R744
- electrical defrosting
- 2 x NTC temperature probe
- siphoned condensate drains
- back doors – quantity according to the module
- exposition: zinc-plated steel, powder coated in white (RAL 9003)
- storage: steel coated in grey
- worktop: linen stainless steel
- color of the base black (RAL 9005)
- perspex covers – 1250, 1875, 2500, 3750

OPTIONS

- electronic expansion valve
- LEDit lighting
- PVC floor profiles
- bumper
- sidewalls

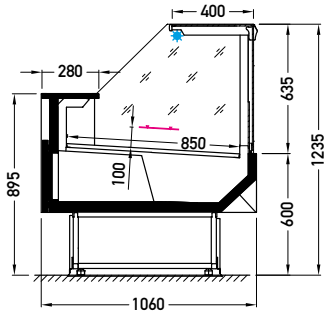

LDGR-28 GSL



2500

AVAILABLE MODULES

1250 1875 2500 3750
NW45 NZ45 NZ90

Grazia LDGR-29
GSL



Grazia LDGR-29 **2500 GSL**

STANDARD FEATURES

- working temperature – straight module and corners from 0°C to 2°C
- refrigerant: R744
- electrical defrosting
- 2 x NTC temperature probe
- siphoned condensate drains
- exposition: zinc-plated steel, powder coated in white (RAL 9003)
- worktop: linen stainless steel
- color of the base black (RAL 9005)
- perspex covers – 1250, 1875, 2500, 3750

OPTIONS

- electronic expansion valve
- LEDit lighting
- PVC floor profiles
- bumper
- sidewalls

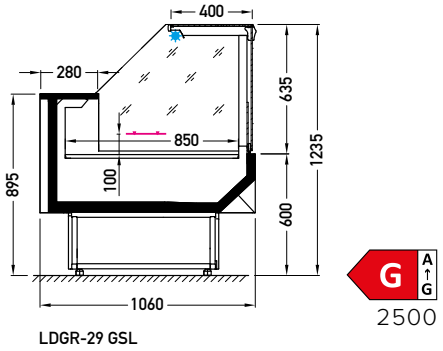

LDGR-29 GSL

2500

AVAILABLE MODULES

1250 1875 2500 3750
NW45 NZ45 NZ90

Grazia LDGR-30
GST



Grazia LDGR-30 **2500 GST**

STANDARD FEATURES

- working temperature: from 0°C to 2°C
- refrigerant: R744
- electrical defrosting
- 2 x NTC temperature probe
- siphoned condensate drains
- 2 expostion: zinc-plated steel, powder coated in white (RAL 9003)
- worktop: linen stainless steel
- perspex covers – 1250, 1875, 2500, 3750

OPTIONS

- electronic expansion valve
- LEDit lighting
- PVC floor profiles
- bumper
- sidewalls

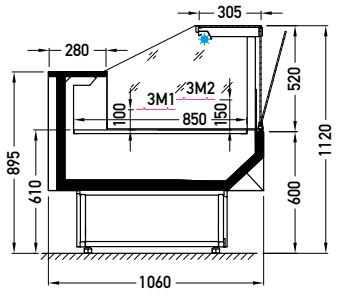

LDGR-30* GST



1250

AVAILABLE MODULES | 1250 1875 2500 3750

Lhotse LDLH-12

CSS | BCA

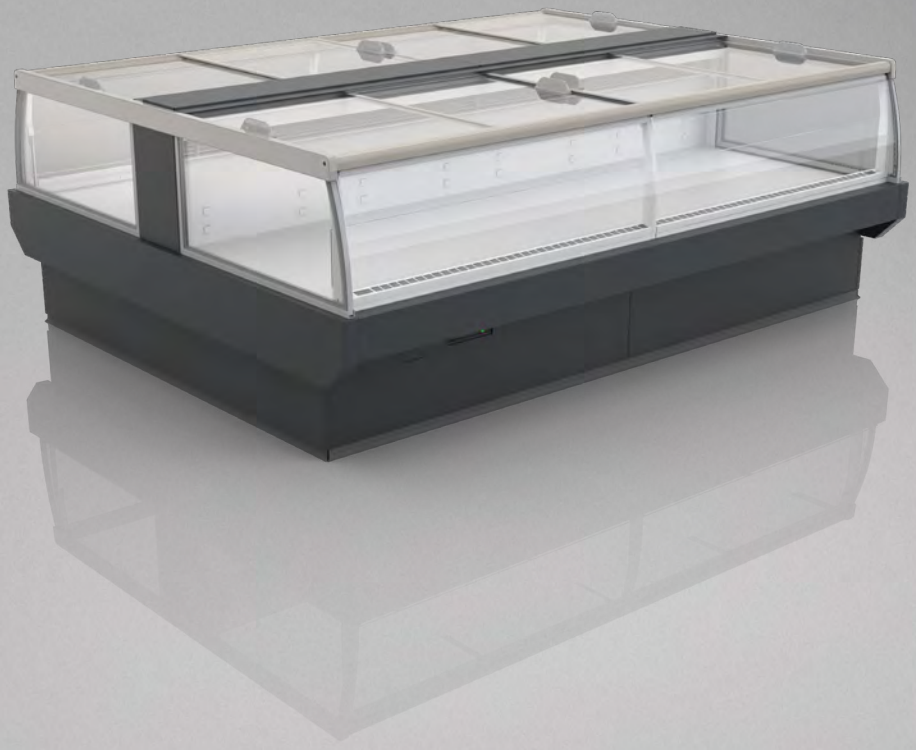

STANDARD FEATURES

- working temperature: from 0°C to 2°C
- refrigerant: R744
- electrical defrosting
- 2 x NTC temperature probe
- siphoned condensate drains
- 2 expostion: zinc-plated steel, powder coated in white (RAL 9003)
- worktop: linen stainless steel
- exposition on the full base
- mechanical night blind in cassette for version BCA
- cascade 3-levels zinc steel (RAL 9003) for version BCA

OPTIONS

- electronic expansion valve
- LEDit lighting
- PVC floor profiles
- bumper
- sidewalls

Lhotse LDLH-12 **2500 CSS**

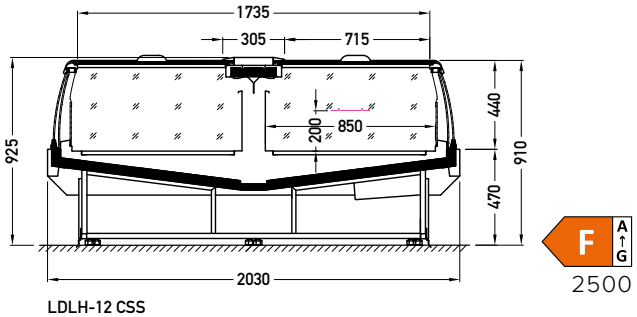

F A↑G

2500

LDLH-12 CSS

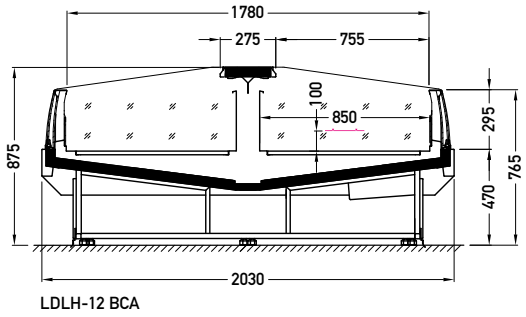

G A↑G

2500

LDLH-12 BCA

AVAILABLE MODULES

1875 2500 3750
1930G

Lhotse LDLH-36

GSD | GSL

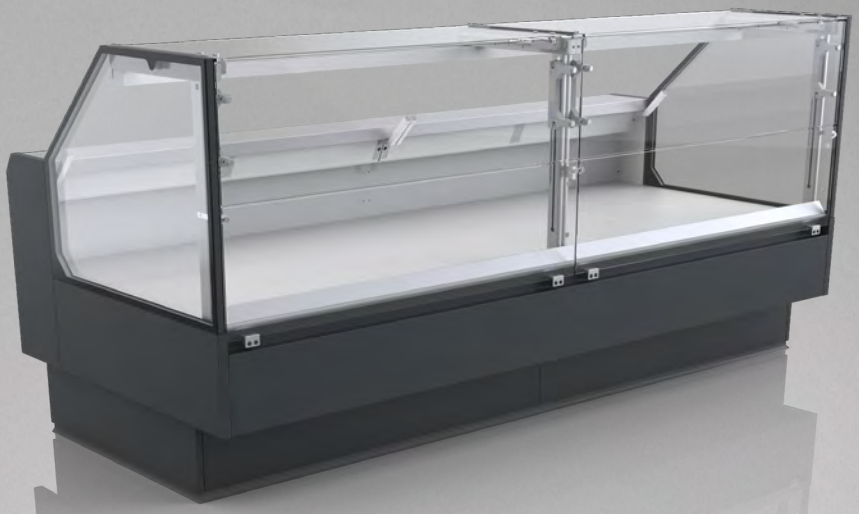

Lhotse LDLH 36 **2500 GSD**

STANDARD FEATURES

- working temperature: from 0°C to 2°C
- refrigerant: R744
- electrical defrosting
- 2 x NTC temperature probe
- siphoned condensate drains
- exposition: zinc-plated steel, powder coated in white (RAL 9003)
- worktop: linen stainless steel
- GSD without a possibility to install lighting
- exposition on a full base

OPTIONS

- electronic expansion valve
- LEDit lighting
- PVC floor profiles
- bumper
- sidewalls

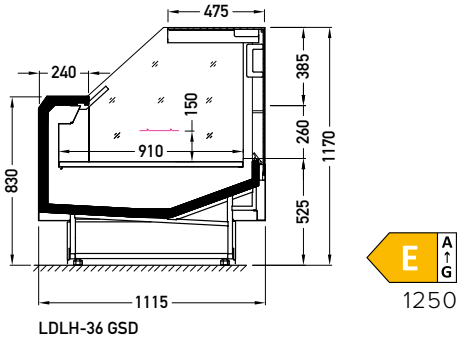

LDLH-36 GSD

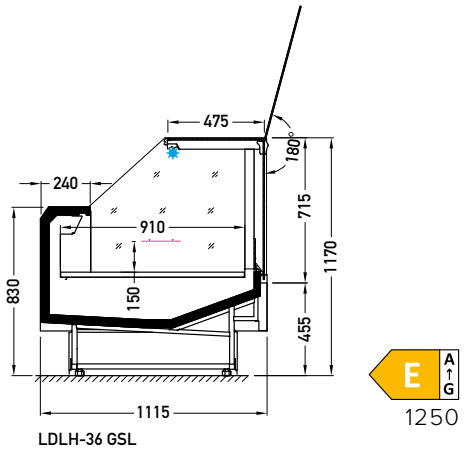

LDLH-36 GSL

AVAILABLE MODULES | 1250 1875 2500 3750

Lhotse LDLH-37

GSL | BSA



Lhotse LDLH-37 **2500 GSL**

STANDARD FEATURES

- working temperature – straight and corner NZC/NZS GSL from 0°C to 2°C; corner NZC/NZS BSA from 2°C to 4°C (with cascade from 0°C to 2°C); corner NWS from 4°C to 8°C
- refrigerant: R744
- electrical defrosting
- 2 x NTC temperature probe
- siphoned condensate drains
- exposition: zinc-plated steel, powder coated in white (RAL 9003)
- worktop: linen stainless steel
- exposition on a full base

OPTIONS

- electronic expansion valve
- LEDit lighting
- PVC floor profiles
- bumper
- sidewalls

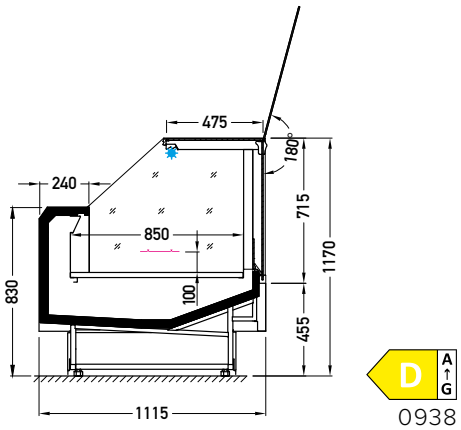

LDLH-37 GSL

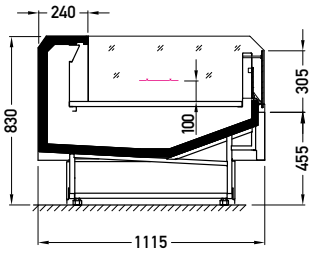

LDLH-37 BSA

0938



0938

AVAILABLE MODULES

0938 1250 1875 2150 2500 3750
NW45 NW90 NZC45 NZS45 NZS90

Lhotse LDLH-46

GCL | BCA



STANDARD FEATURES

- working temperature – straight module: from 0°C to 2°C; corner nodules from 4°C to 8°C
- refrigerant: R744
- electrical defrosting
- 2 x NTC temperature probe
- siphoned condensate drains
- exposition: zinc-plated steel, powder coated in white (RAL 9003)
- worktop: linen stainless steel
- expositions full base

OPTIONS

- electronic expansion valve
- LEDit lighting
- PVC floor profiles
- bumper
- sidewalls

Lhotse LDLH-46 **2500 GCL**

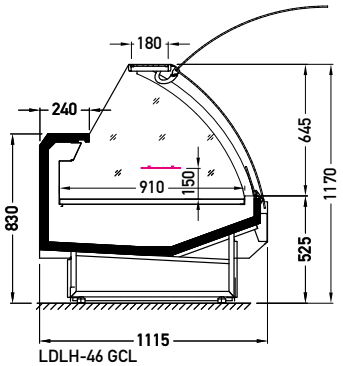

F A↑G
2500

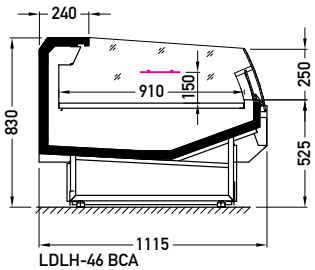

F A↑G
2500

AVAILABLE MODULES | 1250 1875 2150 2500 3750

Lhotse LDLH-47

GCL | BCA



Lhotse LDLH-47 **2500 GCL**

STANDARD FEATURES

- working temperature – straight module: from 0°C to 2°C; corner nodules from 4°C to 8°C
- refrigerant: R744
- electrical defrosting
- 2 x NTC temperature probe
- siphoned condensate drains
- exposition: zinc-plated steel, powder coated in white (RAL 9003)
- worktop: linen stainless steel
- expositions full base

OPTIONS

- electronic expansion valve
- LEDit lighting
- PVC floor profiles
- bumper
- sidewalls

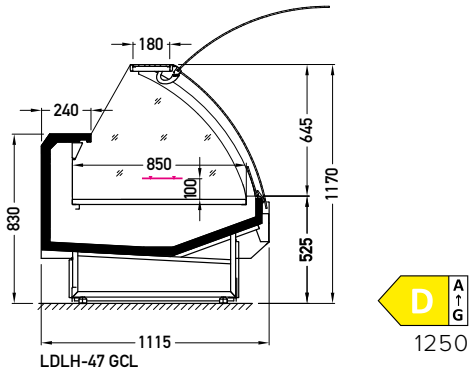

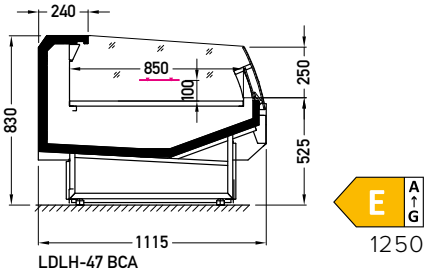

AVAILABLE MODULES

BCA		1250 1875 2150 2500 3750
GCL		0938 1250 1875 2150 2500 3750
BCA	**GCL**	NW45 NW90 NZ45 NZ90





Counters

HOT CASES

Ideal for the busy restaurant or food service outlet, our range of hot cases use hot lamps, heated elements or Bain marie's and can be multiplexed with chilled counters from the same range.

Grazia LGGR-28

GSL | BSA



Grazia LGGR-28 1250 GSL Bain Marie

STANDARD FEATURES

- hot cases: Bain Marie / Hot plate
- temperature up to +85°C
- electronic controller with temperature indicator / for Bain Marie additionally a mechanical thermometer at the air inlet
- feature of the heating element – heating plate (for hot case) / heating bath (for Bain Marie)
- lighting panel: IR heating lamp (for GSL)
- exposition: stainless steel H18
- external surfaces (front / base): zinc-plated steel, powder coated
- exposition on a full base

OPTIONS

- sidewalls

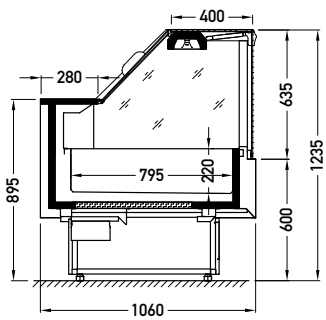

LGGR-28 GSL
Bain-marie

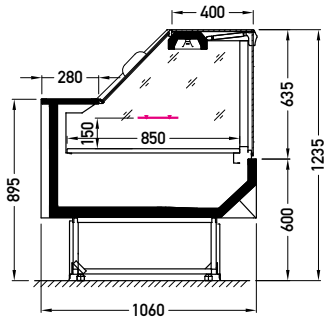

LGGR-28 GSL
Hot-plate

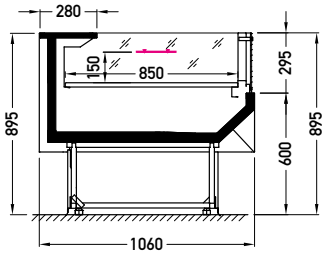

LGGR-28 BSA
Hot-plate

AVAILABLE MODULES | 1250

Lhotse LGLH-37
GSL



Lhotse LGLH-37 1250 GSL Bain Marie

STANDARD FEATURES

- hot cases: Bain Marie / Hot plate
- temperature up to +85°C
- electronic controller with temperature indicator / for Bain Marie additionally a mechanical thermometer at the air inlet
- feature of the heating element – heating plate (for hot case) / heating bath (for Bain Marie)
- lighting panel: IR heating lamp
- exposition: stainless steel H18
- external surfaces (front / base): zinc-plated steel, powder coated
- exposition on a full base

OPTIONS

- sidewalls

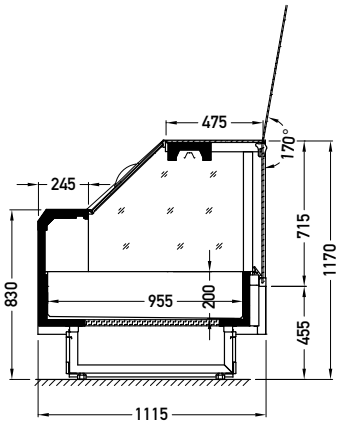

LGLH-37 GSL
Bain-marie

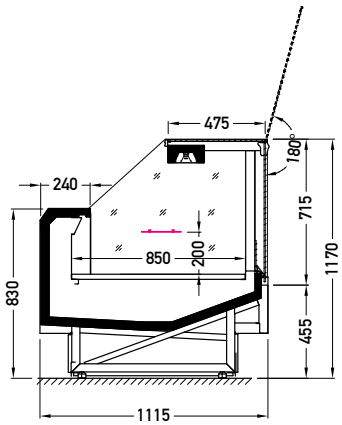

LGLH-37 GSL
Hot-plate

AVAILABLE MODULES

Hot plate	0938	1250	1875
Bain-Marie	0938	1250	



PLUG-IN



Multidecks

PLUG-IN

Our desire for continuous improvement and innovation has led us to develop systems and solutions that reduce environmental impact. That is why we have developed a system that eliminates defrost cycle and lowers the energy use.

Designed for natural (hydrocarbons) refrigerants	R290	R600a
GLOBAL WARMING POTENTIAL (AR4)	3	3

Kaukaz RDKA-11
DVO



Kaukaz RDKA-11 2500 DVO

STANDARD FEATURES

- plug-in unit (on top of the unit)
- working temperature: from 0°C to 2°C
- refrigerant: R290
- electrical defrosting
- siphoned condensate drains – connection to the sewage system is necessary (optionally – condensate pump)
- electronic controller with temperature indicator
- exposition: zinc-plated steel, powder coated in white (RAL 9003)
- 4 rows of suspended shelves, on shelves and on air inlet price holders 39 mm
- lighting: top, LEDit, NW-4
- color of the base black (RAL 9005)

OPTIONS

- sidewalls

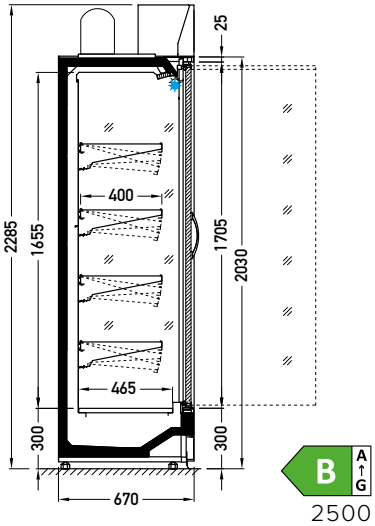

RDKA-11 DVO

2500

AVAILABLE MODULES | 1250 2500 3750

Medium RDME-10

DVO | DDS | BDA



Medium RDME-10 2500 DVO

STANDARD FEATURES

- working temperature for BDA: from 2°C to 4°C; for DVO/DDS: from 0°C to 2°C
- refrigerant: R290
- natural defrosting
- automatic evaporation of condensate
- electronic controller with temperature indicator
- exposition: zinc-plated steel, powder coated in white (RAL 9003)
- 4 rows of suspended shelves, on shelves and on air inlet price holders 39 mm
- perspex shelf riser for BDA
- lighting: top, LEDit, NW-4
- color of the base black (RAL 9005)
- mechanical night blind for version BDA

OPTIONS

- sidewalls

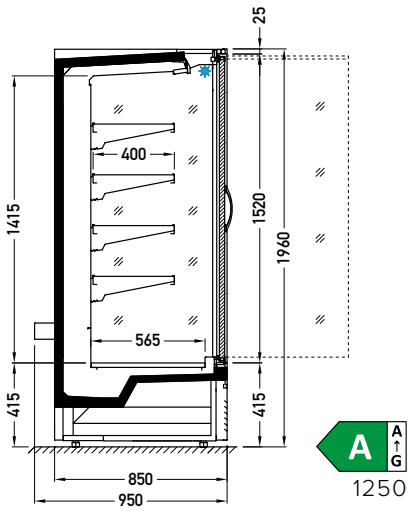

A 1250

RDME-10 DVO

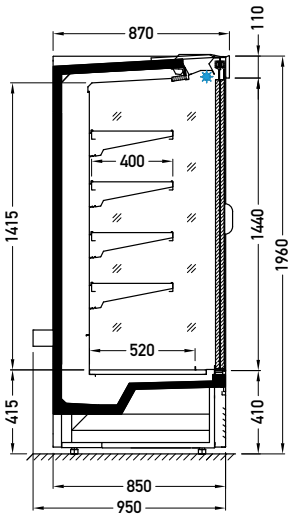

B 2500

RDME-10 DDS

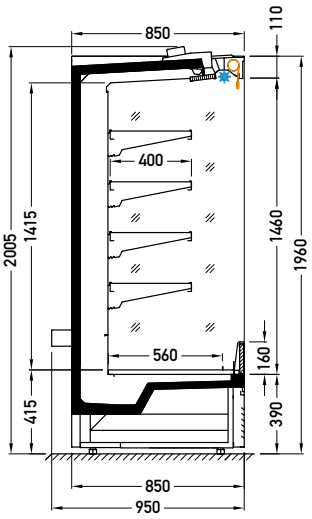

E 2500

RDME-10 BDA

AVAILABLE MODULES | 1250 1875 2500

Medium RDME-16
BSA



Medium RDME-16 1310 BSA

STANDARD FEATURES

- working temperature: from 2°C to 4°C
- refrigerant: R290
- natural defrosting
- automatic evaporation of condensate
- electronic controller with temperature indicator
- exposition: zinc-plated steel, powder coated in white (RAL 9003)
- 4 rows of suspended shelves, on shelves and on air inlet price holders 39 mm
- lighting: top, LEDit, NW-4
- color of the base black (RAL 9005)
- Integrated sidewalls
- mechanical night blind

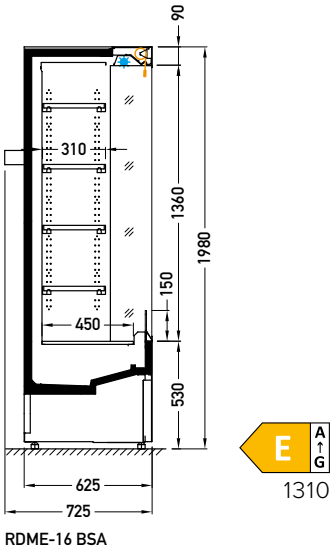

RDME-16 BSA

AVAILABLE MODULES | 0480 0660 1310

Medium RDME-21

DVO | DDS | BSA



Medium RDME-21 2500 DVO

STANDARD FEATURES

- working temperature: for DVO/DDS: from 0°C to 2°C; for BSA: from 2°C to 4°C;
- refrigerant: R290
- natural defrosting
- automatic evaporation of condensate
- electronic controller with temperature indicator
- exposition: zinc-plated steel, powder coated in white (RAL 9003)
- 4 rows of suspended shelves, on shelves and on air inlet price holders 39 mm
- lighting: top, LEDit, NW-4
- color of the base black (RAL 9005)
- mechanical night blind for version BSA

OPTIONS

- sidewalls

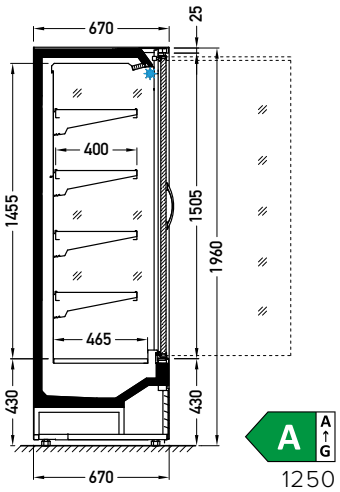

RDME-21 DVO

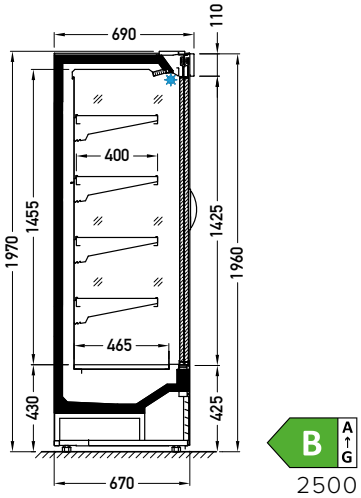

RDME-21 DDS

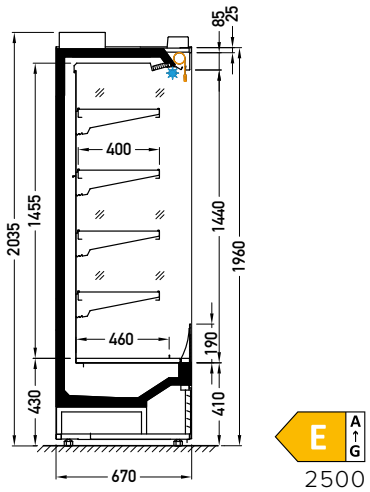

RDME-21 BSA

AVAILABLE MODULES

DDS	**DVO**	1250	1875	2500	
BSA		0900	1250	1875	2500

Medium RDME-22

DVO | DDS | BSA



Medium RDME-22 **2500 BSA**

STANDARD FEATURES

- working temperature: DVO/DDS from 0°C to 2°C; BSA 2°C to 6°C
- refrigerant: R290
- natural defrosting
- automatic evaporation of condensate
- electronic controller with temperature indicator
- exposition: zinc-plated steel, powder coated in white (RAL 9003)
- 4 rows of suspended shelves, on shelves and on air inlet price holders 39 mm
- lighting: top, LEDit, NW-4
- color of the base black (RAL 9005)
- mechanical night blind for version BSA

OPTIONS

- sidewalls

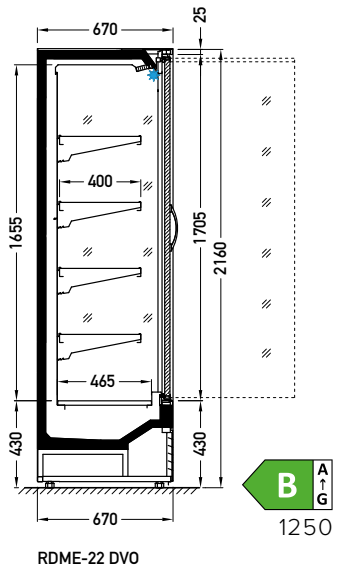

RDME-22 DVO

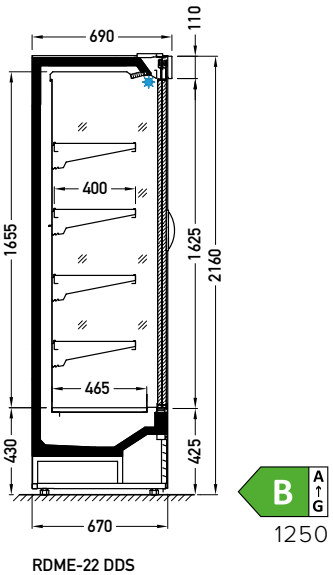

RDME-22 DDS

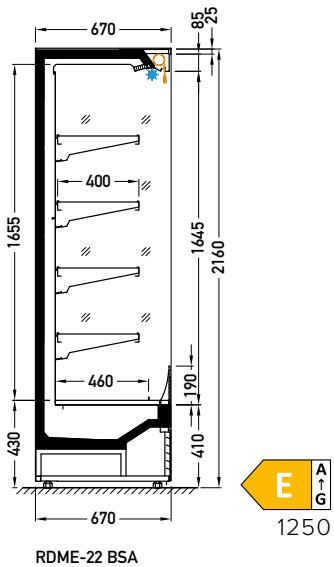

RDME-22 BSA

AVAILABLE MODULES

BSA	0900 1250 1600 1875 2500
DVO	1250 1875 2500
DDS	1250 1875

Garmo RDGA-L4
DVO



Garmo RDGA-L4 **2500 DVO**

STANDARD FEATURES

- working temperature: from 0°C to 2°C
- refrigerant: R290
- hot gas defrosting
- automatic evaporation of condensate
- electronic controller with temperature indicator
- exposition: zinc-plated steel, powder coated in white (RAL 9003)
- 4 rows of suspended shelves, on shelves and on air inlet price holders 39 mm
- lighting: top, LEDit, NW-4
- color of the base black (RAL 9005)

OPTIONS

- sidewalls

HIGHLY COMMENDED







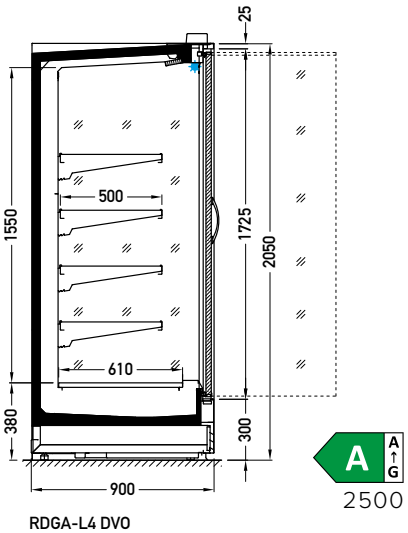

RDGA-L4 DVO

AVAILABLE MODULES | 1250 1875 2500 3750

Garmo RDGA-L5
DVO | DDS



Garmo RDGA-L5 **2500 DVO**

STANDARD FEATURES

- working temperature: from 0°C to 2°C
- refrigerant: R290
- hot gas defrosting
- automatic evaporation of condensate
- electronic controller with temperature indicator
- exposition: zinc-plated steel, powder coated in white (RAL 9003)
- 4 rows of suspended shelves, on shelves and on air inlet price holders 39 mm
- lighting: top, LEDit, NW-4
- color of the base black (RAL 9005)

OPTIONS

- sidewalls

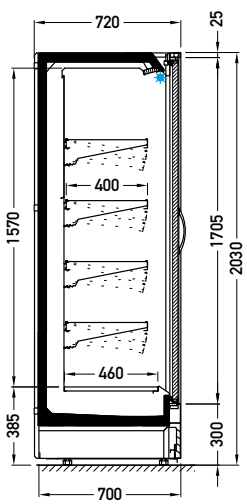

RDGA-L5 DVO



2500

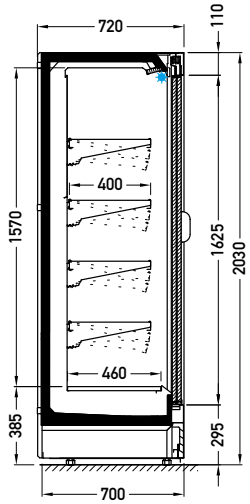

RDGA-L5 DDS



2500

AVAILABLE MODULES | 1000 1250 1600 1875 2500 3750





Semi Vertical
Multidecks
PLUG-IN

This range of lower height multidecks has been designed to combine compact size and large display area. This solution provides a variety of options for store layout.

Designed for natural (hydrocarbons) refrigerants

R290 R600a

GLOBAL WARMING POTENTIAL (AR4)

3 3

Atlanta RDAT-10
BSA



Atlanta RDAT-10 **1180 BSA**

STANDARD FEATURES

- working temperature: from 0°C to 2°C
- refrigerant: R290
- natural defrosting
- automatic evaporation of condensate
- electronic controller with temperature indicator
- exposition: zinc-plated steel, powder coated in white (RAL 9003)
- 2 rows of suspended shelves, on shelves and on air inlet price holders 39 mm
- lighting: top, LEDit, NW-4
- color of the base black (RAL 9005)
- Integrated sidewalls (perspex)
- mechanical night blind

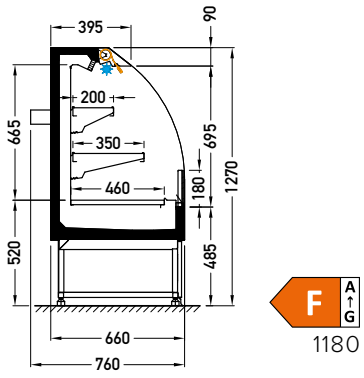

RDAT-10 BSA

AVAILABLE MODULES | 0880 1180 1875 2500

Atlanta RDAL-N5

DDS | BSA

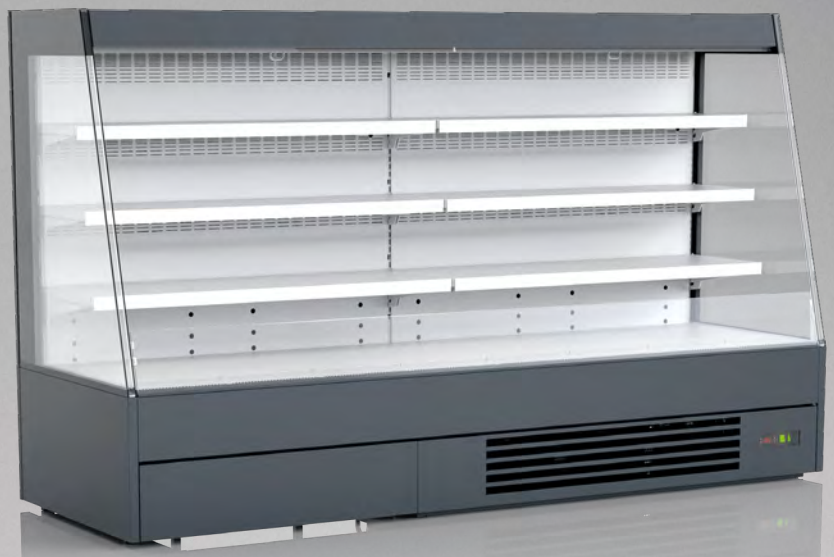

Atlanta RDAL-N5 **2500 DDS**

STANDARD FEATURES

- working temperature: from 0°C to 2°C
- natural defrosting
- refrigerant: R290
- automatic evaporation of condensate
- electronic controller with temperature indicator
- exposition: zinc-plated steel, powder coated in white (RAL 9003)
- 3 rows of suspended shelves, on shelves and on air inlet price holders 39 mm
- **lighting: top, LEDit, NW-4**
- colour of the base black (RAL 9005)
- mechanical night blind for BSA version

OPTIONS

- sidewalls

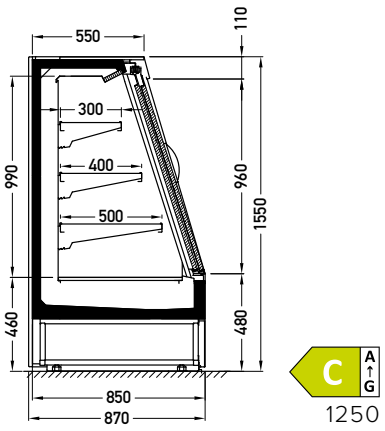

RDAL-N5* DDS

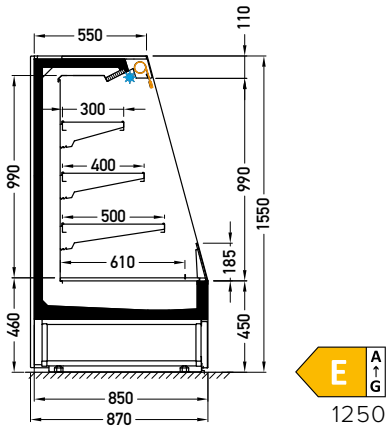

RDAL-N5* BSA

AVAILABLE MODULES | 1250 1875 2500

Atlanta RDAT-20
BSA



Atlanta RDAT-20 **2500 BSA**

STANDARD FEATURES

- working temperature: from 0°C to 2°C
- refrigerant: R290
- natural defrosting
- automatic evaporation of condensate
- electronic controller with temperature indicator
- exposition: zinc-plated steel, powder coated in white (RAL 9003)
- 3 rows of suspended shelves, on shelves and on air inlet price holders 39 mm
- lighting: top, LEDit, NW-4
- color of the base black (RAL 9005)
- Integrated sidewalls (perspex)
- mechanical night blind

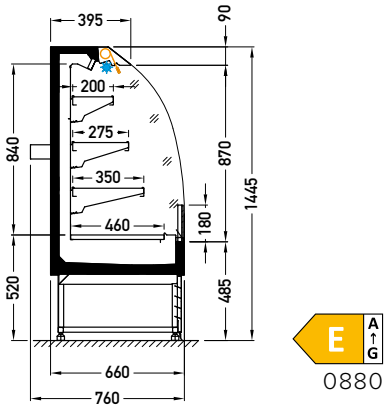

RDAT-20 BSA

0880

AVAILABLE MODULES | 0880 1180 1875 2500
0580G

Atlanta RDAT-30
XXX



Atlanta RDAT-30 **0980 XXX**

STANDARD FEATURES

- working temperature: from 2°C to 4°C
- refrigerant: R290
- natural defrosting
- automatic evaporation of condensate
- electronic controller with temperature indicator
- exposition: zinc-plated steel, powder coated in white (RAL 9003)
- 3 rows of suspended shelves, on shelves and on air inlet price holders 39 mm
- lighting: top, LEDit, NW-4
- color of the base black (RAL 9005)
- integrated sidewalls (perspex)
- mechanical night blind

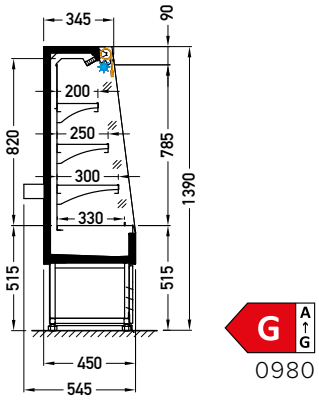

RDAT-30

0980

AVAILABLE MODULES | 0980



Islands

PLUG-IN

These are best adapted for spaces, where you do not want to obscure the view. We constantly improve the design of our equipment and we managed to create better side visibility, easier combining into lines, better service access for some parts and better design capabilities with painted vertical corner profiles.

Designed for natural (hydrocarbons) refrigerants	R290	R600a
GLOBAL WARMING POTENTIAL (AR4)	3	3

Pamir WNPR-04

CSS | XXX

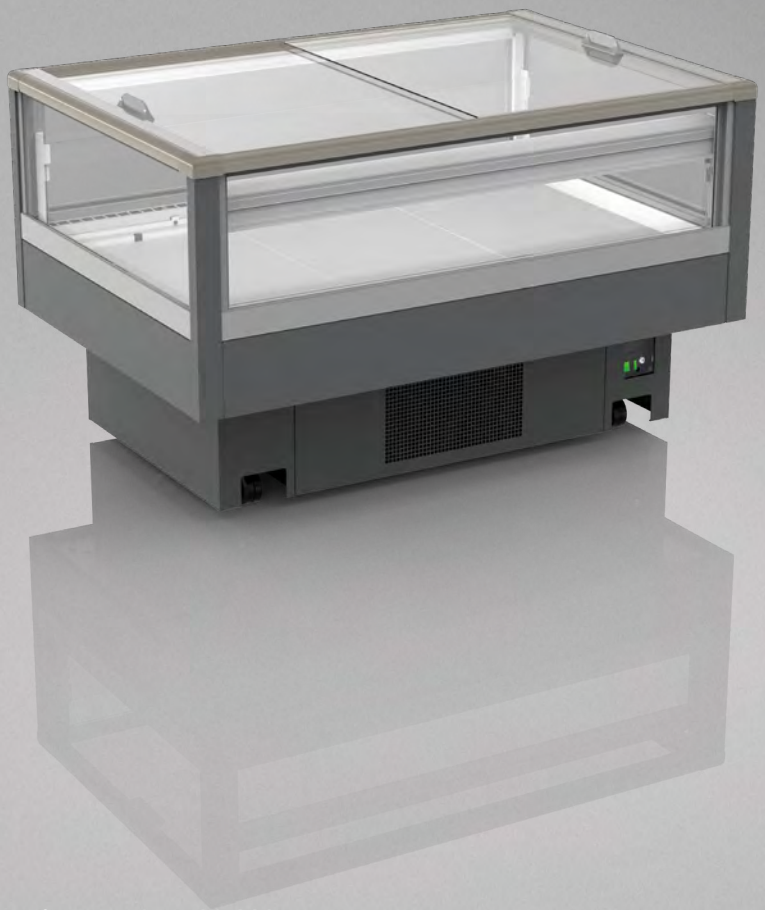

Pamir WNPR-04 **1530 CSS**

STANDARD FEATURES

- working temperature: from -25°C to -21°C
- refrigerant: R290
- hot gas defrosting
- automatic evaporation of condensate
- electronic controller with temperature indicator
- exposition: zinc-plated steel, powder coated in white (RAL 9003)
- thermopane glass
- color of the base black (RAL 9005)
- sidewalls integrated

OPTIONS

- bumper
- LEDit lighting
- night cover for version XXX

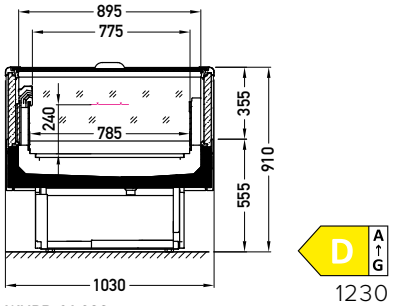

D A↑G

1230

WNPR-04 CSS

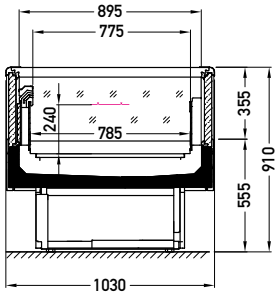

F A↑G

1230

WNPR-04 XXX

AVAILABLE MODULES

CSS	1230	1530	2030	2530
XXX	1230	1530	2030	

Pamir WDPR-04

CSS | XXX

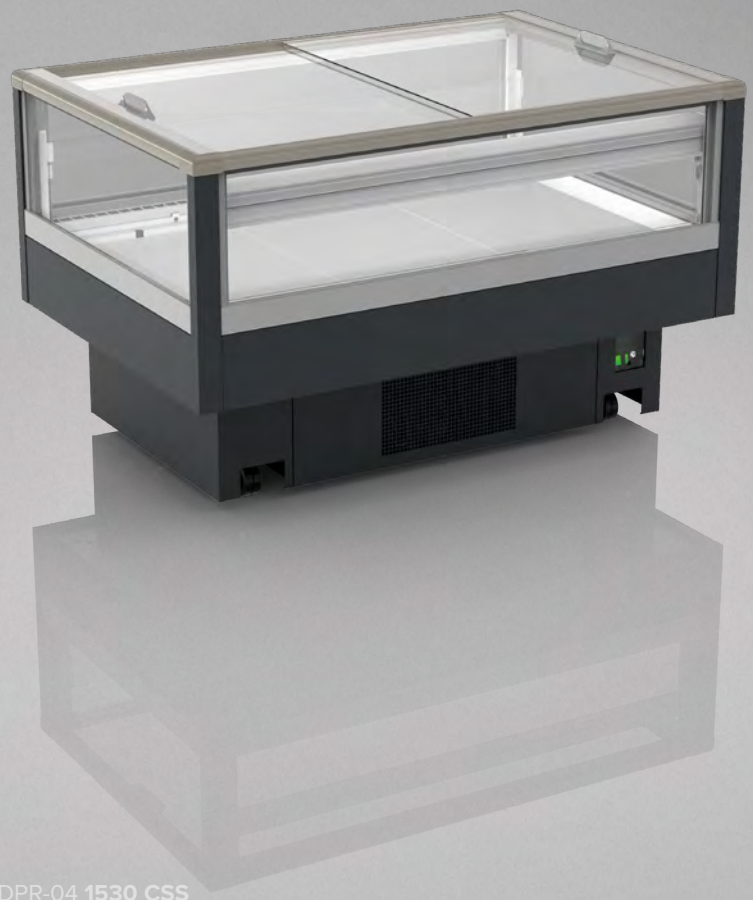

Pamir WDPR-04 **1530 CSS**

STANDARD FEATURES

- working temperature: from 0°C to 2°C
- refrigerant: R290
- hot gas defrosting for modules 1530/2530 CSS; electrical defrosting for modules 2030 CSS / all XXX
- automatic evaporation of condensate
- electronic controller with temperature indicator
- exposition: zinc-plated steel, powder coated in white (RAL 9003)
- thermopane glass
- color of the base black (RAL 9005)
- sidewalls integrated

OPTIONS

- bumper
- LEDit lighting

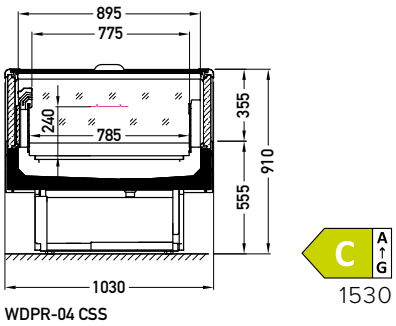

1530

WDPR-04 CSS

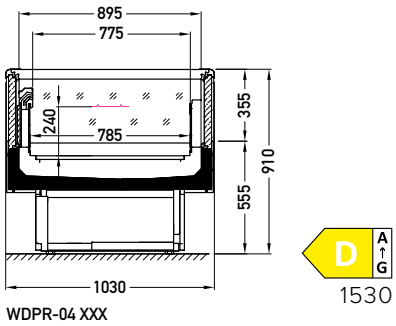

1530

WDPR-04 XXX

AVAILABLE MODULES | 1530 2030 2530

Pamir WNPA-09
CSS



Pamir WNPA-09 **0905 CSS**

STANDARD FEATURES

- working temperature: from -25°C to -21°C
- refrigerant: R290
- hot gas defrosting
- automatic evaporation of condensate
- electronic controller with temperature indicator
- exposition: zinc-plated steel, powder coated in white (RAL 9003)
- thermopane glass
- color of the base black (RAL 9005)
- sidewalls integrated

OPTIONS

- bumper
- LEDit lighting

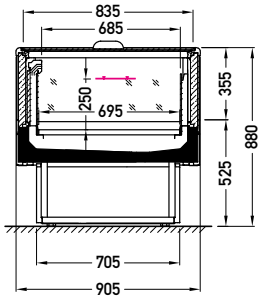

WNPA-09 CSS



0905

AVAILABLE MODULES | 0905

Pamir WNPA-10
CSS



Pamir WNPA-10 **1010 CSS**

STANDARD FEATURES

- working temperature: from -25°C to -21°C
- refrigerant: R290
- hot gas defrosting
- automatic evaporation of condensate
- electronic controller with temperature indicator
- exposition: zinc-plated steel, powder coated in white (RAL 9003)
- thermopane glass
- color of the base black (RAL 9005)
- sidewalls integrated

OPTIONS

- bumper
- LEDit lighting

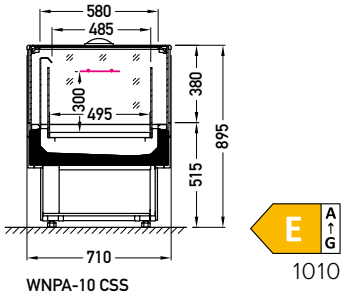

WNPA-10 CSS

1010

AVAILABLE MODULES | 1010

Pamir WNPA-15
CSS

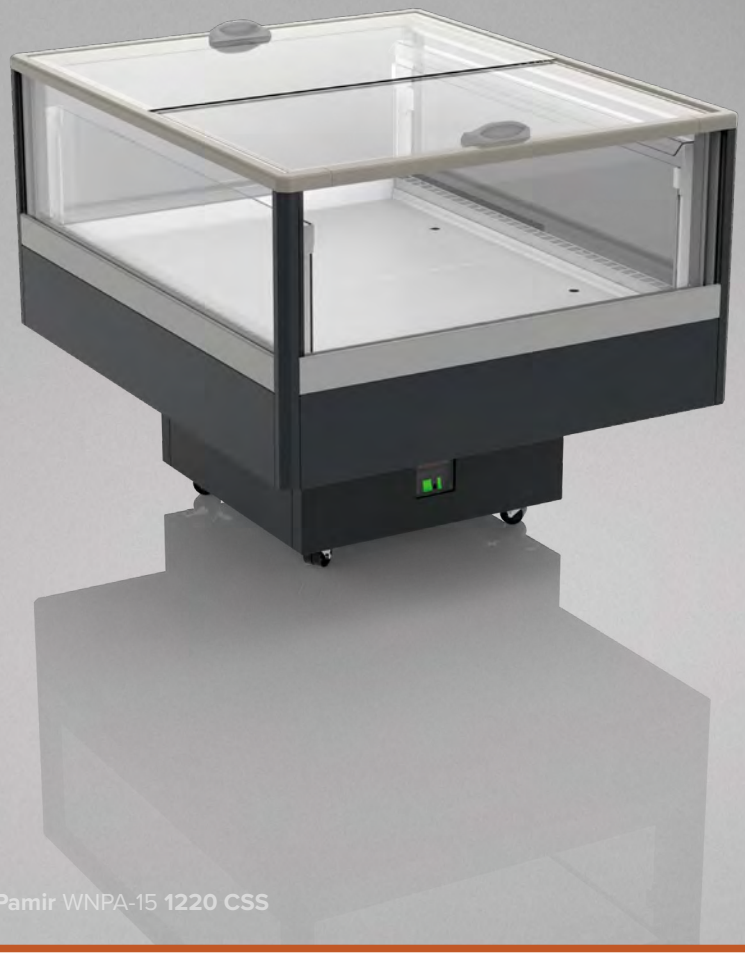

Pamir WNPA-15 **1220 CSS**

STANDARD FEATURES

- working temperature: from -25°C to -21°C
- refrigerant: R290
- hot gas defrosting
- automatic evaporation of condensate
- electronic controller with temperature indicator
- exposition: zinc-plated steel, powder coated in white (RAL 9003)
- thermopane glass
- color of the base black (RAL 9005)
- sidewalls integrated

OPTIONS

- bumper
- LEDit lighting

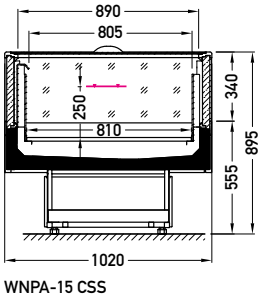

WNPA-15 CSS



1220

AVAILABLE MODULES | 1220

Imja WNIJ-05
CCS



Imja WNIJ-05 **2500 CCS**

STANDARD FEATURES

- working temperature: from -25°C to -21°C
- refrigerant: R290
- hot gas defrosting
- automatic evaporation of condensate
- electronic controller with temperature indicator
- exposition: zinc-plated steel, powder coated in white (RAL 9003)
- thermopane glass (4 side glass)
- color of the base black (RAL 9005)

OPTIONS

- sidewalls
- LEDit lighting

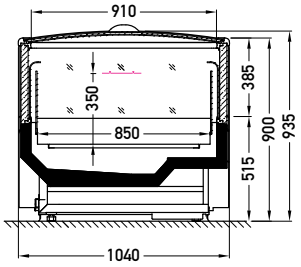

WNIJ/WDIJ-05 CCS



1875

AVAILABLE MODULES | 1875 2500

Imja WNIJ-06
CCS



STANDARD FEATURES

- working temperature: from -25°C to -21°C
- refrigerant: R290
- hot gas defrosting
- automatic evaporation of condensate
- electronic controller with temperature indicator
- exposition: zinc-plated steel, powder coated in white (RAL 9003)
- thermopane glass (3 side glass)
- color of the base black (RAL 9005)
- in module 2150G sidewalls integrated

OPTIONS

- sidewalls
- LEDit lighting

Imja WNIJ-06 **2500 CCS**

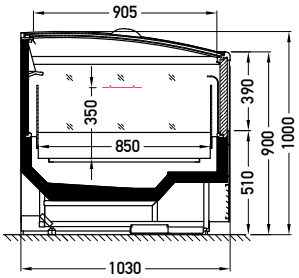

WNIJ/WDIJ-06 CCS



1875

AVAILABLE MODULES | 1875 2500 2150G

Imja WNIJ-07
CCP



Imja WNIJ-07 **2100 CCP**

STANDARD FEATURES

- working temperature: from -25°C to -21°C
- refrigerant: R290
- hot gas defrosting
- automatic evaporation of condensate
- electronic controller with temperature indicator
- exposition: zinc-plated steel, powder coated in white (RAL 9003)
- thermopane glass
- color of the base black (RAL 9005)
- flat front bumper; in module TG flat front and side bumper
- lighting: in the handrail, LEDit, CW-2
- full sidewalls integrated

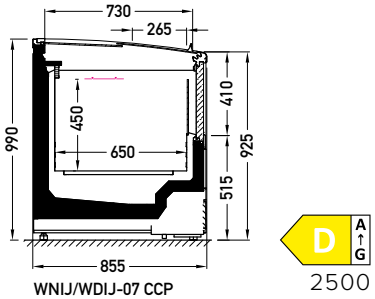

WNIJ/WDIJ-07 CCP

AVAILABLE MODULES

1850 2100 2500
1850G

Imja WNIJ-14
CSP



Imja WNIJ-14 **2500 CSP**

STANDARD FEATURES

- working temperature: from -25°C to -21°C
- refrigerant: R290
- hot gas defrosting
- automatic evaporation of condensate
- electronic controller with temperature indicator
- exposition: zinc-plated steel, powder coated in white (RAL 9003)
- thermopane glass
- color of the base black (RAL 9005)
- flat front bumper; in module TG flat front and side bumper
- in module TG sidewalls integrated

OPTIONS

- sidewalls
- LEDit lighting

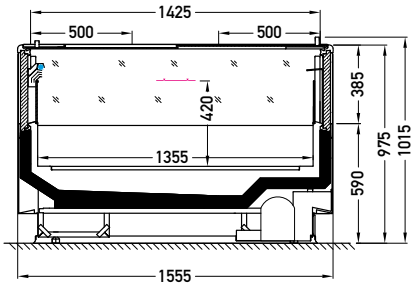

WNIJ-14



2500

AVAILABLE MODULES | 1875 2500 1450G

Dolomiti WMDO-03
CCP



Dolomiti WMDO-03 **2500 CCP**

STANDARD FEATURES

- working temperature: from -25°C to -21°C
- refrigerant: R290
- hot gas defrosting
- automatic evaporation of condensate
- electronic controller with temperature indicator
- exposition: side and bottom wire shelves, powder coated
- color of the front and base white (RAL 9003)
- flat front bumper; in module TG flat front and side bumper
- lighting: in the handrail, LEDit, CW-2
- integrated sidewalls

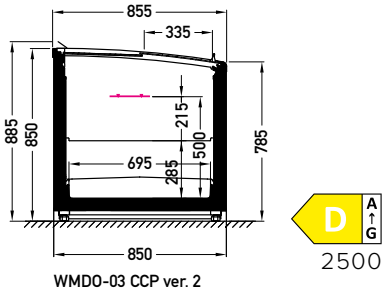

WMDO-03 CCP ver. 2

AVAILABLE MODULES

1850 2100 2500
1850G

Elbrus WNEL-17
CCP



STANDARD FEATURES

- working temperature: from -25°C to -21°C
- refrigerant: R290
- electrical defrosting
- automatic evaporation of condensate
- electronic controller with temperature indicator
- exposition: zinc-plated steel, powder coated in white (RAL 9003)
- thermopane glass (4 side glass)
- color of the base black (RAL 9005)

OPTIONS

- sidewalls
- LEDit lighting

Elbrus WNEL-17 **2500 CCP + 1895G CCP**

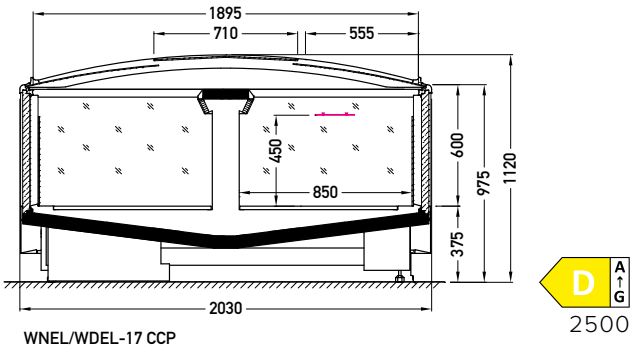

WNEL/WDEL-17 CCP

D A↑G

2500

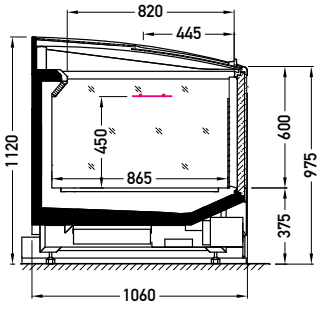

WNEL/WDEL-17-1895G CCP

D A↑G

2500

AVAILABLE MODULES

2500 3750
1895G

Elbrus WNEL-27
CCP

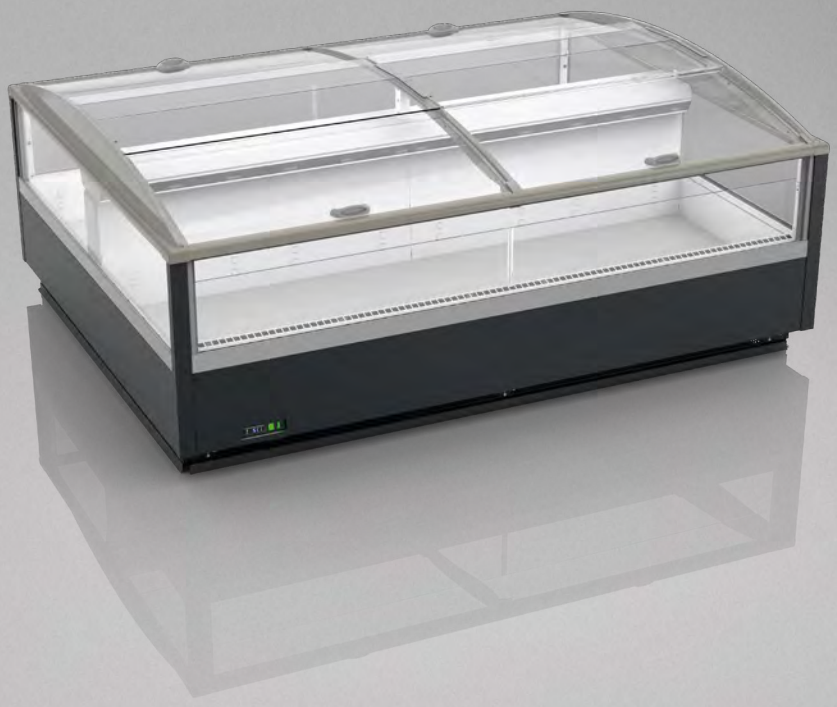

STANDARD FEATURES

- working temperature: from -25°C to -21°C
- refrigerant: R290
- electrical defrosting
- automatic evaporation of condensate
- electronic controller with temperature indicator
- exposition: zinc-plated steel, powder coated in white (RAL 9003)
- thermopane glass (4 side glass)
- color of the base black (RAL 9005)

OPTIONS

- sidewalls
- LEDit lighting

Elbrus WNEL-27 **2500 CCP**

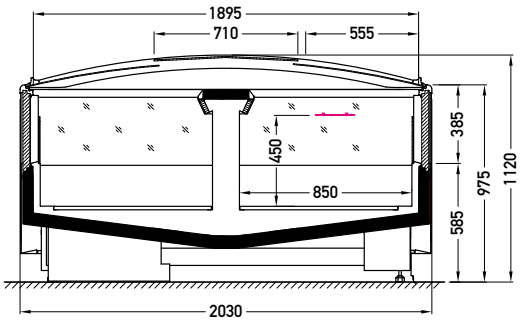

WNEL/WDEL-27 CCP



2500

AVAILABLE MODULES

2500 3750
1895G



Cabinets

PLUG-IN

It is typically people with busy lifestyles who are shopping for frozen products. Good arrangement of a store can save a lot of time while shopping. That is why design of our cabinets is about good visibility and ergonomics. Easy to choose – easy to reach. But when there is no perfect match for interior requirements, then the only solution is to mix. Our line of mix cabinets is a customized solution, so you do not have to compromise anymore – you just have a broad range of equipment to choose from.

Designed for natural (hydrocarbons) refrigerants	R290	R600a
GLOBAL WARMING POTENTIAL (AR4)	3	3

Wetar SNWE-02
DTO



Wetar SNWE-02 **1564 DTO**

STANDARD FEATURES

- working temperature: from -25°C to -21°C
- refrigerant: R290
- hot gas defrosting
- automatic evaporation of condensate
- electronic controller with temperature indicator
- exposition: zinc-plated steel, powder coated in white (RAL 9003)
- 4 rows of suspended shelves, on shelves and on air inlet price holders 39 mm
- lighting: vertical in doors frame, LEDit CW-2
- framed doors without heaters

OPTIONS

- sidewalls

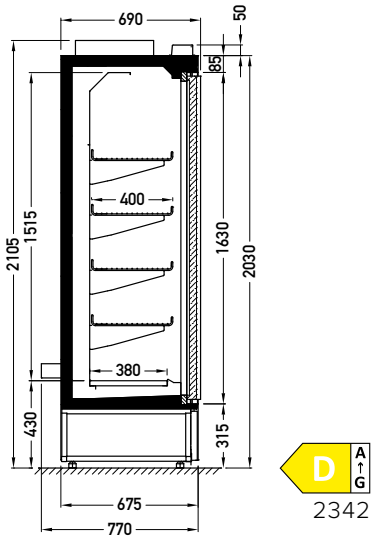

SNWE-02 DTO

AVAILABLE MODULES | 0795 1564 2342

Wetar SNWE-04
DTO



Wetar SNWE-04 **2342 DTO**

STANDARD FEATURES

- working temperature: from -25°C to -21°C
- refrigerant: R290
- hot gas defrosting
- automatic evaporation of condensate
- electronic controller with temperature indicator
- exposition: zinc-plated steel, powder coated in white (RAL 9003)
- 4 rows of suspended shelves, on shelves and on air inlet price holders 39 mm
- lighting: vertical in doors frame, LEDit CW-2
- framed doors without heaters

OPTIONS

- sidewalls

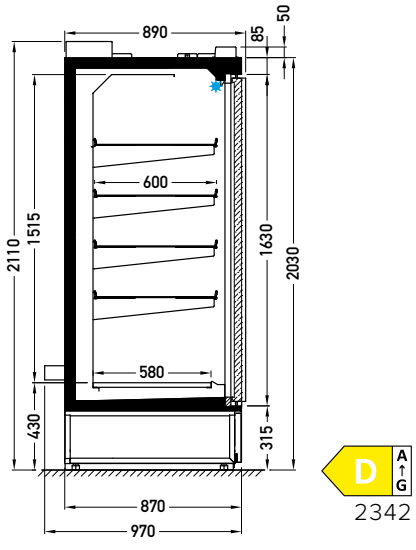

SNWE-04 DTO

2342

AVAILABLE MODULES | 1564 2342

Denali SNDE-04/05
DTO



Denali SNDE-05 **2500 DTO**

STANDARD FEATURES

- working temperature: from -25°C to -21°C
- refrigerant: R290
- hot gas defrosting
- automatic evaporation of condensate
- electronic controller with temperature indicator
- **energy saving fans**
- exposition: zinc-plated steel, powder coated in white (RAL 9003)
- 2 rows of suspended shelves, on shelves and on air inlet price holders 39 mm
- **lighting: vertical in doors frame, LEDit CW-2**
- framed doors without heaters
- sidewalls integrated
- SNDE-05 with inverter compressor
- SNDE-05 unit on the steel construction – for use with any freezer island
- SNDE-04 for use with WMDO-03 and WNIJ 07

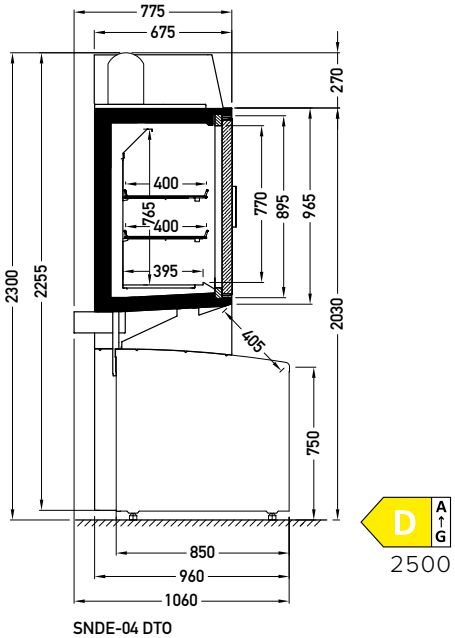

SNDE-04 DTO

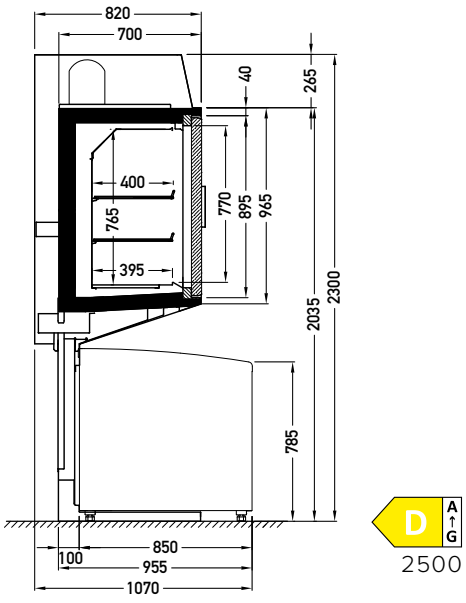

SNDE-05 DTO

AVAILABLE MODULES | 2100 2500

Glacier SNGL-L
DTO



Glacier SNGL-L3 **2342 DTO**

STANDARD FEATURES

- working temperature: from -25°C to -21°C
- refrigerant: R290
- hot gas defrosting
- automatic evaporation of condensate
- electronic controller with temperature indicator
- exposition: zinc-plated steel, powder coated in white (RAL 9003)
- 4 rows of suspended wire
- shelves,
- **lighting: vertical in doors frame, LEDit CW-2**
- **framed doors without heaters**

OPTIONS

- sidewalls

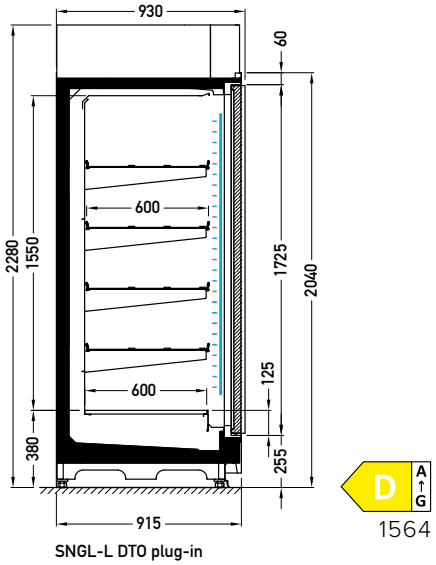

1564

SNGL-L DTO plug-in

AVAILABLE MODULES

L2-1564 **L3**-2342
1875G

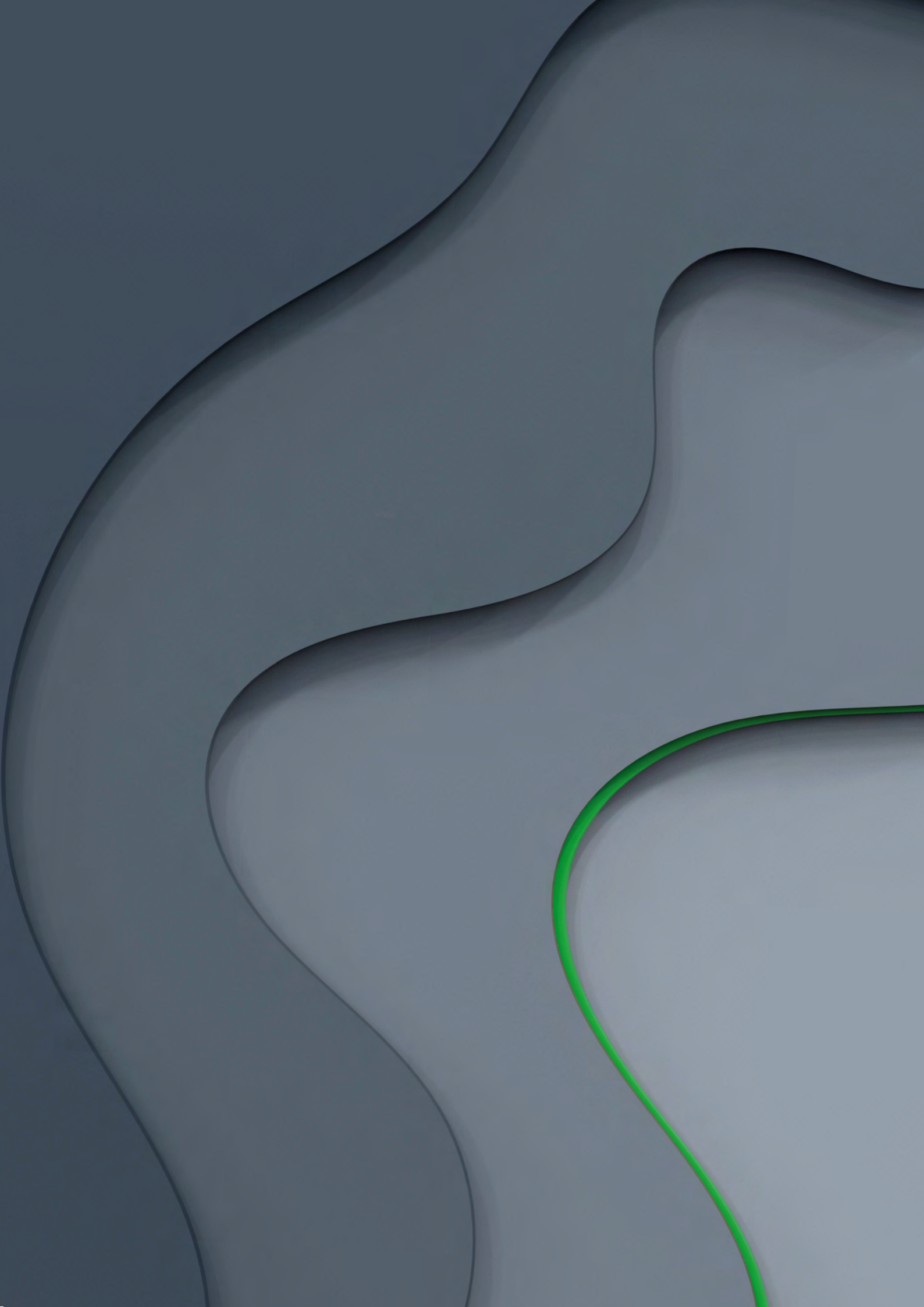

Promotion

PLUG-IN

Promotional equipment places your products within arm's reach. They are designed to improve impulse purchase, combining small size with huge selling power. Good product display, high mobility and clever design of equipment, makes promotions more effective.

Designed for natural (hydrocarbons) refrigerants	R290	R600a
GLOBAL WARMING POTENTIAL (AR4)	3	3

Fiji LDFI-13
BSA



Fiji LDFI-13 **0900 BSA**

STANDARD FEATURES

- working temperature: CSS from 0°C to 2°C; BCA from 2°C to 4°C
- refrigerant: R290
- natural defrosting
- automatic evaporation of condensate
- electronic controller with temperature indicator
- exposition: zinc-plated steel, powder coated in white (RAL 9003)
- inox square bumper 25 x 25 mm
- color of the base black (RAL 9005)
- sidewalls glass with black/ grey silk screen painting
- on wheels

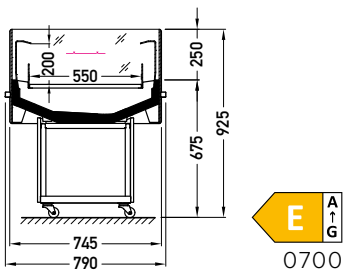

0700

LDFI-13* BSA

AVAILABLE MODULES | 0700 0900

Fiji LDFI-14

CSS | BCA



Fiji LDFI-14 **0900 CSS**

STANDARD FEATURES

- working temperature: from 2°C to 4°C for BCA, from 0°C to 2°C for CSS
- refrigerant: R290
- natural defrosting
- automatic evaporation of condensate
- electronic controller with temperature indicator
- exposition: zinc-plated steel, powder coated in white (RAL 9003)
- inox square bumper 25 x 25 mm
- color of the base black (RAL 9005)
- sidewalls glass with black/ grey silk screen painting
- on wheels

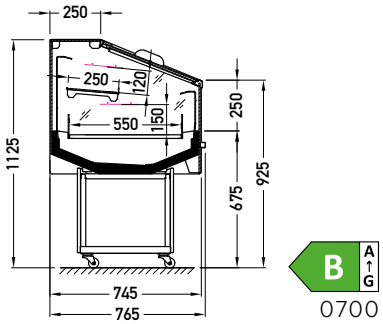

LDFI-14* CSS

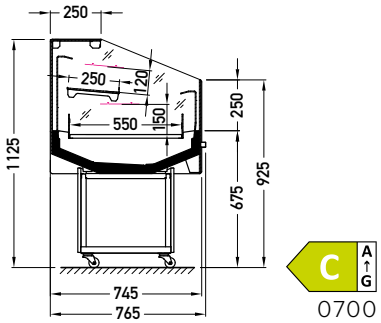

LDFI-14* BSA

AVAILABLE MODULES | 0700 0900

Fiji LDFI-22
BCA



Fiji LDFI-22 **1250 BCA**

STANDARD FEATURES

- working temperature: from 2°C to 4°C
- refrigerant: R290
- electrical defrosting
- automatic evaporation of condensate
- electronic controller with temperature indicator
- exposition: zinc-plated steel, powder coated in white (RAL 9003)
- 2 glass shelves
- inox square bumper 25 x 25 mm
- color of the base black (RAL 9005)
- sidewalls, back and air flow channels made of perspex
- on wheels

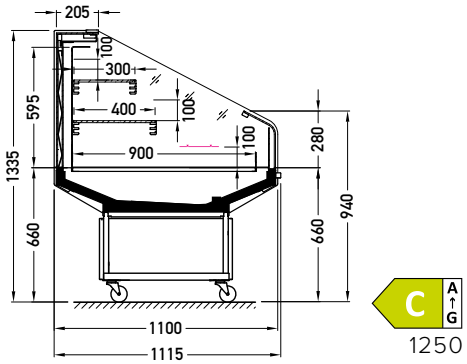

LDFI-22 BCA

AVAILABLE MODULES | 1250

Fiji LDFI-25

CSS | BSA



Fiji LDFI-25 **1250 CSS**

STANDARD FEATURES

- working temperature: for BSA and CSS with integrated sidewalls version from 0°C to 2°C; for BSA version with single glass sidewalls from 2°C to 4°C
- refrigerant: R290
- electrical defrosting
- automatic evaporation of condensate
- electronic controller with temperature indicator
- exposition: zinc-plated steel, powder coated in white (RAL 9003)
- inox square bumper 25 x 25 mm
- color of the base black (RAL 9005)
- sidewalls: integrated glass with black/grey silk screen painting; single glass without silk screen
- on wheels

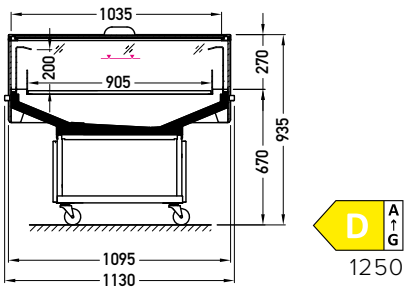

LDFI-25 CSS

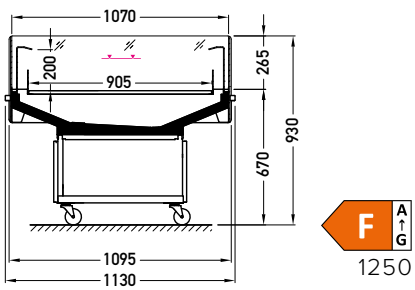

LDFI-25 BSA

AVAILABLE MODULES

CSS	1000	1250	1600
BSA	1000	1250	1600

Fiji LDFI-28

CSS | BSA



Fiji LDFI-28 **1250 CSS**

STANDARD FEATURES

- working temperature: from 0°C to 2°C
- refrigerant: R290
- electrical defrosting
- automatic evaporation of condensate
- electronic controller with temperature indicator
- **energy saving fans**
- exposition: zinc-plated steel, powder coated in white (RAL 9003)
- inox square bumper 25 x 25 mm
- colour of the base black (RAL 9005)
- sidewalls glass with black/ grey screen printing
- on wheels

OPTIONS

- LEDit lighting

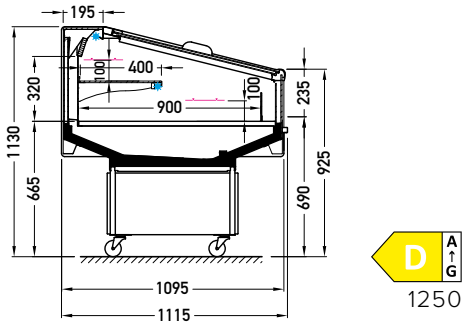

D A↑G

1250

LDFI-28 CSS 3M2

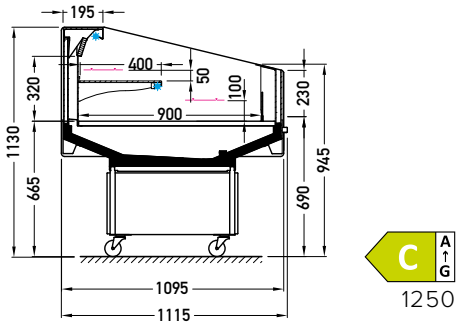

C A↑G

1250

LDFI-28 BSA 3M2

AVAILABLE MODULES | 1250 1600

Fiji LDFI-29

CSS | BSA



Fiji LDFI-29 **1250 BSA**

STANDARD FEATURES

- working temperature: from 2°C to 4°C for BSA, from 0°C to 2°C for CSS
- refrigerant: R290
- electrical defrosting
- automatic evaporation of condensate
- electronic controller with temperature indicator
- **energy saving fans**
- exposition: zinc-plated steel, powder coated in white (RAL 9003)
- inox square bumper 25 x 25 mm
- colour of the base black (RAL 9005)
- sidewalls glass with black/ grey screen printing
- on wheels

OPTIONS

- LEDit lighting

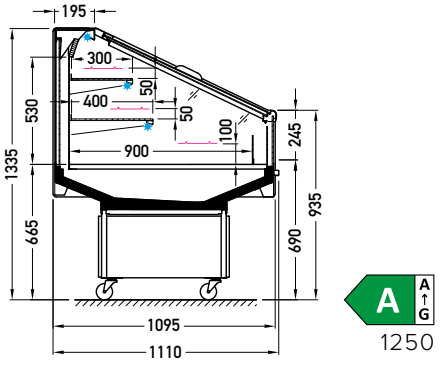

A A↑G

1250

LDFI-29 CSS 3M1

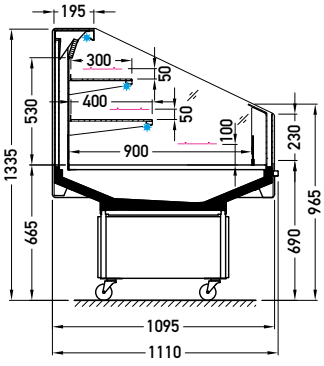

D A↑G

1250

LDFI-29 BSA 3M2

AVAILABLE MODULES | 1250 1600

Fiji LDFI-30/31/32
BSA



FIJI LDFI-31 1600 BSA

STANDARD FEATURES

- double devices (two evaporators)
- refrigerant: R290
- working temperature: from 2°C to 4°C
- electrical defrosting
- automatic evaporation of condensate
- electronic controller with temperature indicator
- exposition: zinc-plated steel, powder coated in white (RAL 9003)
- inox square bumper 25 x 25 mm
- color of the base black (RAL 9005)
- sidewalls glass

OPTIONS

- LEDit lighting

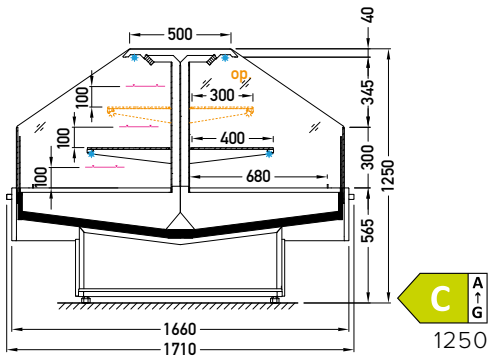

LDFI-32

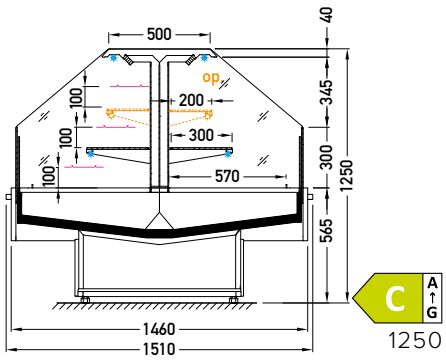

LDFI-31

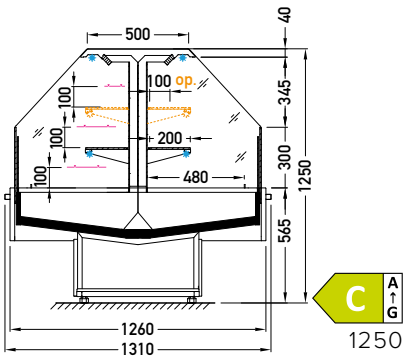

LDFI-30

AVAILABLE MODULES | **LDFI-30/31/32** 1250 1875 2500





Pastry Line

PLUG-IN

Celebrating special occasions. Birthday cake for your toddler. Sweet surprise for your sweetheart. Christmas cake, glazed gingerbreads, treats for special moments. Display of these special goods must be perfect. That's why our pastry line is an elegant combination of perfect lighting, transparent clear glass and elegant design.

Designed for natural (hydrocarbons) refrigerants	R290	R600a
GLOBAL WARMING POTENTIAL (AR4)	3	3

Elegant RDEL-05
GBT



Elegant RDEL-05 **1400 GBT**

STANDARD FEATURES

- working temperature – straight modules from 0°C to 2°C; corner NW45 from 2°C to 4°C; corner NZ45 from 4°C to 8°C
- refrigerant: R290
- electrical defrosting
- automatic evaporation of condensate
- electronic controller with temperature indicator
- exposition: 3 suspended glass shelves + bottom made of powder coated, zinc-coated metal plate
- shelves support and bottom shelf in grey color RAL 7004
- back doors, sliding, double glazed (in corner and 0600 modules hinged door)
- lighting – top and each shelf – energy-saving, LEDit, WW-2
- sidewalls integrated with thermopane glass, with silk-screen painting

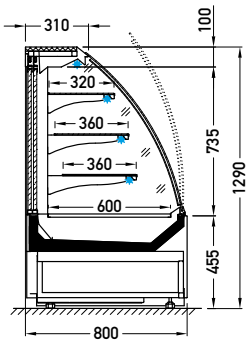

RDEL-05 GBT



1400

AVAILABLE MODULES

0600 0900 1400
NW45 NZ45

Elegant RDEL-06 *self service*
BCA



Elegant RDEL-06 **1400 BCA**

STANDARD FEATURES

- working temperature: from 2°C to 4°C
- refrigerant: R290
- electrical defrosting
- automatic evaporation of condensate
- electronic controller with temperature indicator
- exposition: 3 suspended glass shelves + bottom made of powder coated, zinc-coated metal plate
- shelves support and bottom shelf in grey color RAL 7004
- lighting – top and each shelf – energy-saving, LEDit, WW-2
- sidewalls integrated with thermopane glass, with silk-screen painting
- mechanical night blind

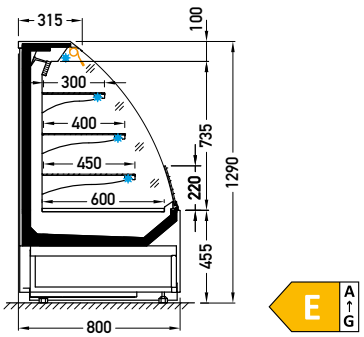

RDEL-06 BCA

1400

AVAILABLE MODULES | 0600 0900 1200 1400

Elegant RDEL-21
GDT



Elegant RDEL-21 **1400 GDT**

STANDARD FEATURES

- working temperature – straight modules from 2°C to 4°C; corner NZ45 from 2°C to 4°C; corner NZ90 from 4°C to 8°C;
- refrigerant: R290
- electrical defrosting
- automatic evaporation of condensate
- electronic controller with temperature indicator
- exposition: 3 suspended glass shelves + bottom made of powder coated, zinc-coated metal plate
- shelves support and bottom shelf in grey color RAL 7004
- back doors, sliding, double glazed (in corner and 0600 modules hinged door)
- lighting – top and each shelf – energy-saving, LEDit, WW-2
- sidewalls integrated with thermopane glass, with silk-screen painting

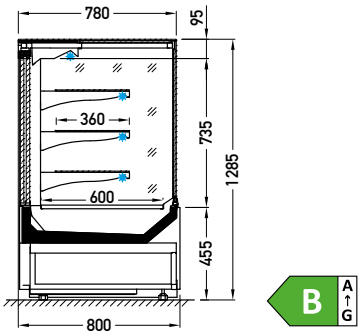

RDEL-21 GDT

0600

AVAILABLE MODULES

0600 0900 1400
NZ45 NZ90

Elegant RDEL-22 *self service*
BSA



Elegant RDEL-22 **1400 BSA**

STANDARD FEATURES

- working temperature: from 2°C to 4°C
- refrigerant: R290
- electrical defrosting
- automatic evaporation of condensate
- electronic controller with temperature indicator
- exposition: 3 suspended glass shelves + bottom made of powder coated, zinc-coated metal plate
- shelves support and bottom shelf in grey color RAL 7004
- lighting – top and each shelf – energy-saving, LEDit, WW-2
- sidewalls integrated with thermopane glass, with silk-screen painting
- mechanical night blind

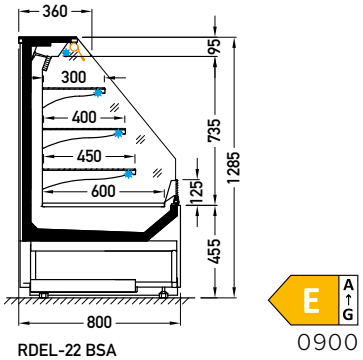

RDEL-22 BSA

0900

AVAILABLE MODULES | 0600 0900 1400

Etna RDET-21
GST



Etna RDET-21 **1400 GST**

STANDARD FEATURES

- working temperature: from 4°C to 8°C
- refrigerant: R290
- electrical defrosting
- automatic evaporation of condensate
- electronic controller with temperature indicator
- exposition: 3 suspended glass shelves + bottom made of powder coated, zinc-coated metal plate
- shelves support and bottom shelf in grey color RAL 7004
- back doors, sliding, double glazed
- lighting – top and each shelf – energy-saving, LEDit, WW-2
- sidewalls integrated glass, with silk-screen painting

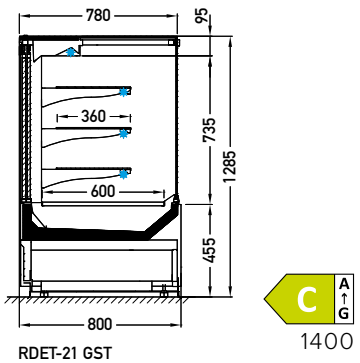

RDET-21 GST

1400

AVAILABLE MODULES | 0900 1400



Counters

PLUG-IN

We focus not only on the display of the product, but also ergonomic and multifunctional use. We have created better conditions for product storage, easier cleaning and flexibility in changing the product from with service to self-service.

Designed for natural (hydrocarbons) refrigerants	R290	R600a
GLOBAL WARMING POTENTIAL (AR4)	3	3

Grazia LDGR-08

BCA | GCL



Grazia LDGR-08 **2500 GCL**

STANDARD FEATURES

- working temperature – straight module and corners from 0°C to 2°C
- refrigerant: R290
- electrical defrosting
- automatic evaporation of condensate
- electronic controller with temperature indicator
- back doors – quantity according to the module
- exposition: zinc-plated steel, powder coated in white (RAL 9003)
- storage: steel coated in grey
- worktop: linen stainless steel
- color of the base black (RAL 9005)
- perspex covers – 1250, 1875, 2500, 3750

OPTIONS

- LEDit lighting
- PVC floor profiles
- bumper
- sidewalls

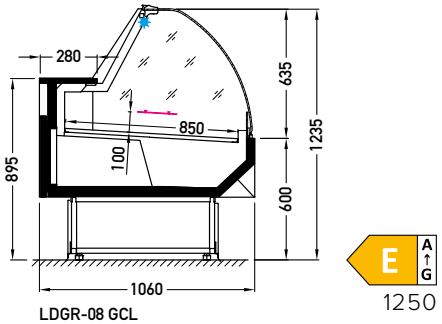

LDGR-08 GCL

1250

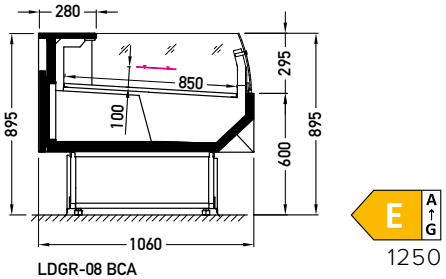

LDGR-08 BCA

1250

AVAILABLE MODULES

BCA	**GCL**	1250 1875 2500 3750
		NW45
GCL		NZ45

Grazia LDGR-09
GCL



Grazia LDGR-09 **2500 GCL**

STANDARD FEATURES

- working temperature – straight module and corners from 0°C to 2°C
- refrigerant: R290
- electrical defrosting
- automatic evaporation of condensate
- electronic controller with temperature indicator
- exposition: zinc-plated steel, powder coated in white (RAL 9003)
- worktop: linen stainless steel
- color of the base black (RAL 9005)
- perspex covers – 1250, 1875, 2500, 3750

OPTIONS

- LEDit lighting
- PVC floor profiles
- bumper
- sidewalls

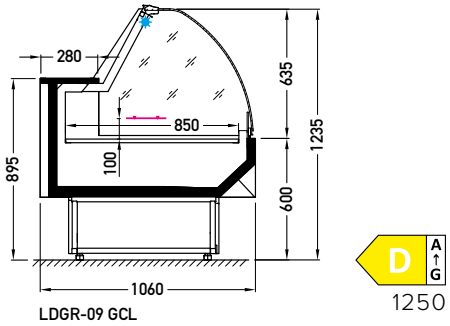

LDGR-09 GCL

1250

AVAILABLE MODULES | 1250 1875 2500 3750

Grazia LDGR-28

GSL | BSA



Grazia LDGR-28 **2500 GSL**

STANDARD FEATURES

- working temperature – straight module and corners from 0°C to 2°C
- refrigerant: R290
- electrical defrosting
- automatic evaporation of condensate
- electronic controller with temperature indicator
- back doors – quantity according to the module
- exposition: zinc-plated steel, powder coated in white (RAL 9003)
- storage: steel coated in grey
- worktop: linen stainless steel
- color of the base black (RAL 9005)
- perspex covers – 1250, 1875, 2500, 3750

OPTIONS

- LEDit lighting
- PVC floor profiles
- bumper
- sidewalls

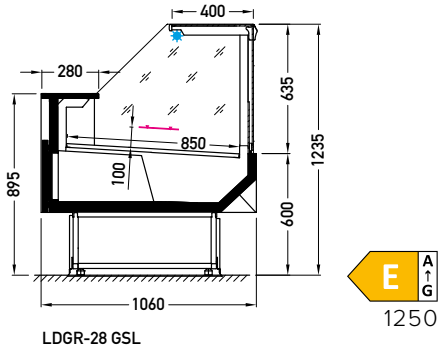

LDGR-28 GSL

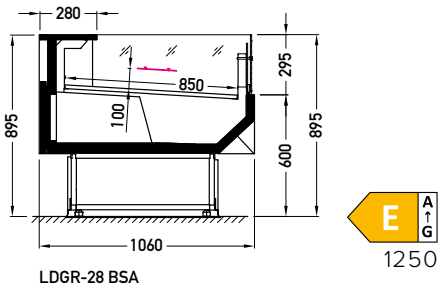

LDGR-28 BSA

AVAILABLE MODULES

BSA GSL	1250 1875 2500 3750	
	NW45	
GSL	NZ45 NZ90	

Grazia LDGR-29

GSL | BSA



Grazia LDGR-29 **2500 GSL**

STANDARD FEATURES

- working temperature – straight module and corners from 0°C to 2°C
- refrigerant: R290
- electrical defrosting
- automatic evaporation of condensate
- electronic controller with temperature indicator
- exposition: zinc-plated steel, powder coated in white (RAL 9003)
- worktop: linen stainless steel
- color of the base black (RAL 9005)
- perspex covers – 1250, 1875, 2500, 3750

OPTIONS

- LEDit lighting
- PVC floor profiles
- bumper
- sidewalls

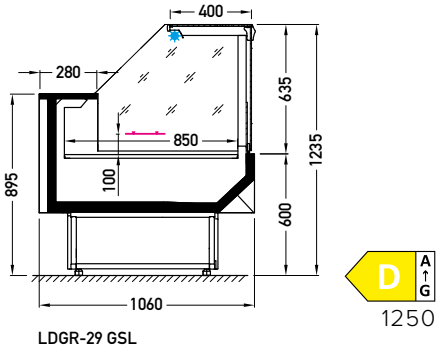

LDGR-29 GSL

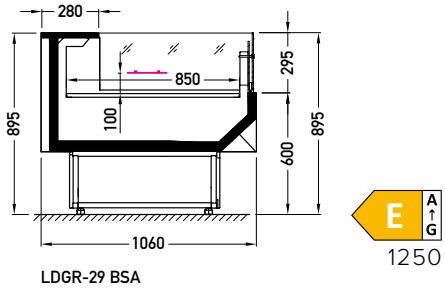

LDGR-29 BSA

AVAILABLE MODULES

BSA GSL	1250 1875 2500 3750 NW45	
GSL	NZ45 NZ90	

Lingtren LDLI-37
GSL



Lingtren LDLI-37 **2500 GSL**

STANDARD FEATURES

- working temperature: from 0°C to 2°C
- refrigerant: R290
- natural defrosting
- automatic evaporation of condensate
- electronic controller with temperature indicator
- exposition: zinc-plated steel, powder coated in white (RAL 9003)
- worktop: linen stainless steel

OPTIONS

- PVC floor profiles
- bumper
- sliding back glass doors
- sidewalls

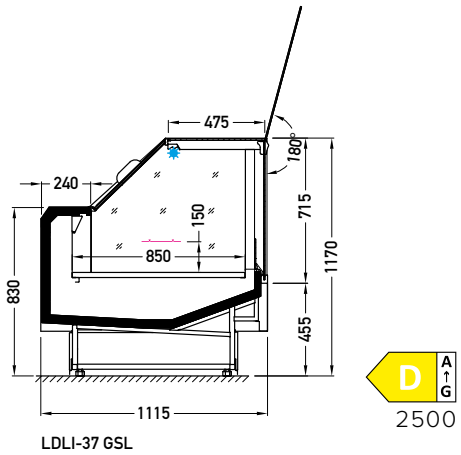

LDLI-37 GSL

AVAILABLE MODULES | 1250 1875 2500 3750



Energy efficiency classes

The energy efficiency class of a refrigerating appliance with a direct sales function shall be determined on the basis of its EEI as set out in Table.

Energy efficiency classes of refrigerating appliances with a direct sales function

ENERGY **EFFICIENCY CLASS**	EEI
A	EEI < 10
B	10 ≤ EEI < 20
C	20 ≤ EEI < 35
D	35 ≤ EEI < 50
E	50 ≤ EEI < 65
F	65 ≤ EEI < 80
G	EEI ≥ 80

Designation of the energy efficiency class is dedicated to a particular products, which are presented on each page of the catalogue. Indicated energy efficiency class depends on a module type, equipment, glassing version and type of a refrigerant. Amendment of each of the said parameters may cause amendment of the energy efficiency class. Contact the manufacturer to acknowledge the energy efficiency class for the product with different parameters to those presented in the catalogue.

Products shown in the catalogue are just examples and do not constitute an offer as such.
The manufacturer reserves the right to alter the features and technical specifications of its products.
If it is not clearly defined temperature ranges presented in this document are for shop conditions (20C/50RH).



Headquarter / Factory: Warszowice, ul. Gajowa 5, Poland
Factory: Żory, al. Jana Pawła II 46, Poland
Contact: +48 32 494 00 00, info@jbg2.com

jbg2.com

© JBG-2 v.1.0 2023